NOISE TOASTER Voltage Controlled Low Pass Filter

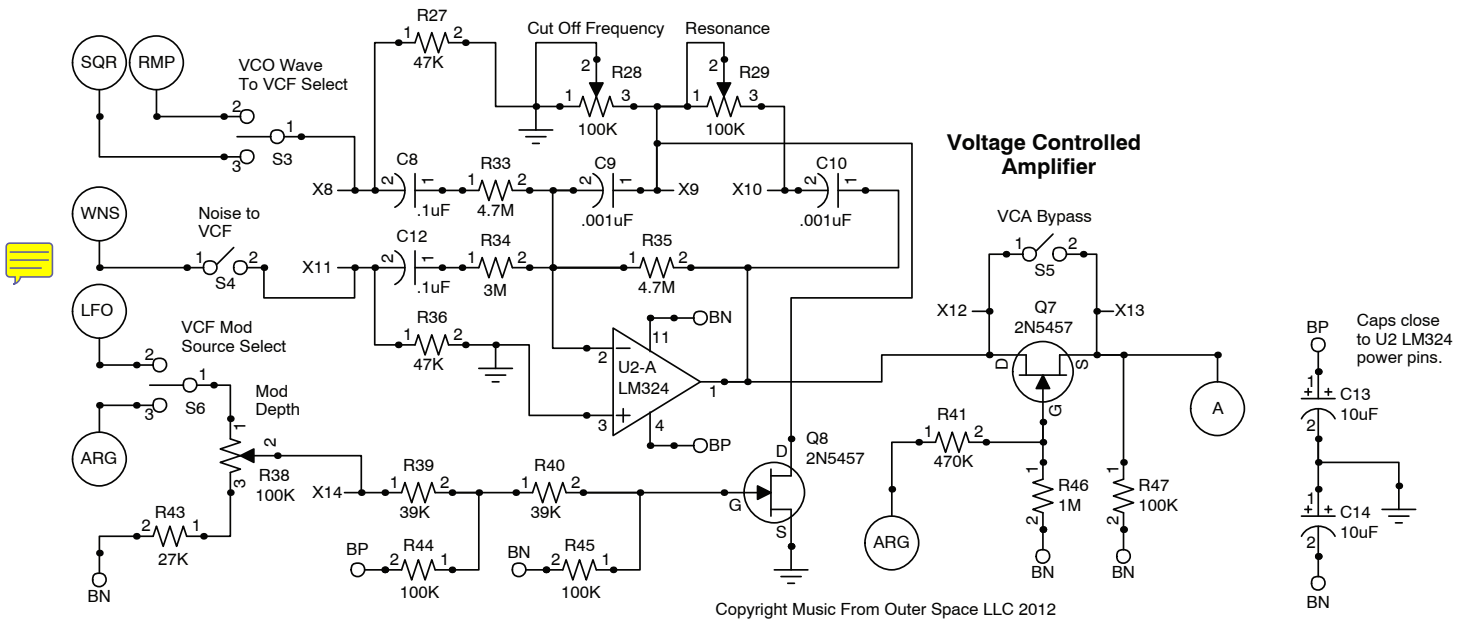

Copyright Music From Outer Space LLC 2012

Delptronics AR

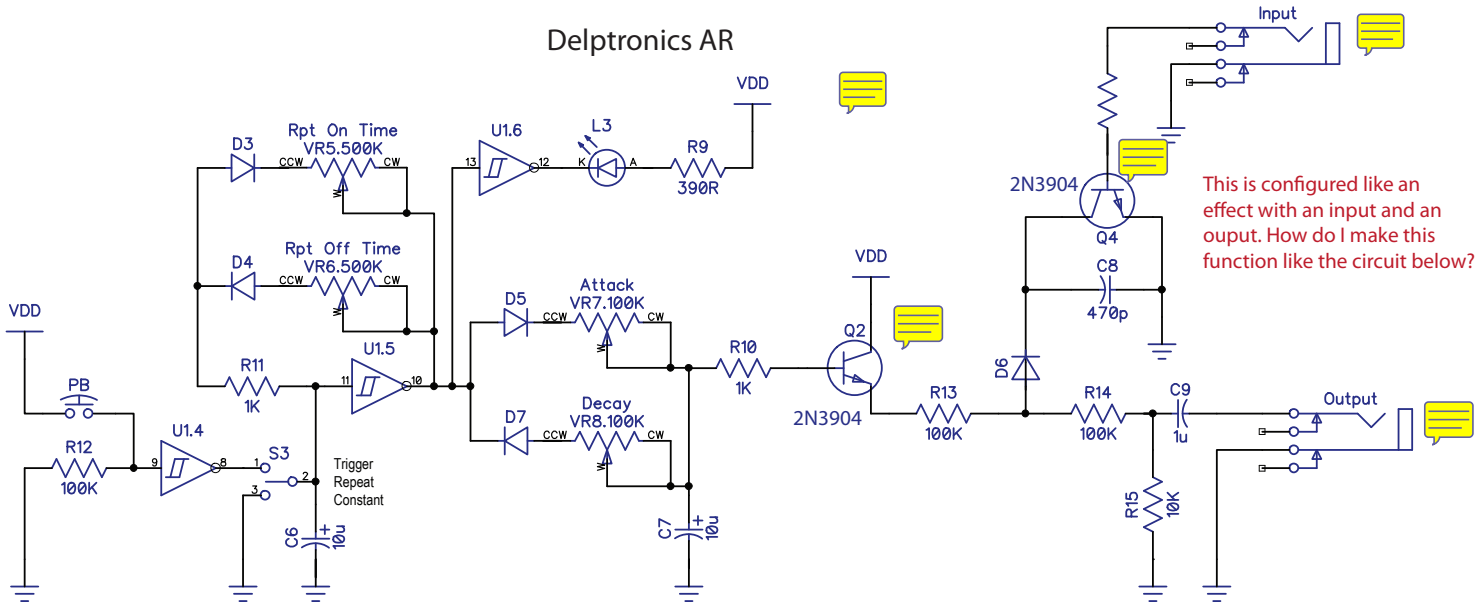

This is configured like an effect with an input and an ouput. How do I make this function like the circuit below?

NOISE TOASTER Attack Decay Generator

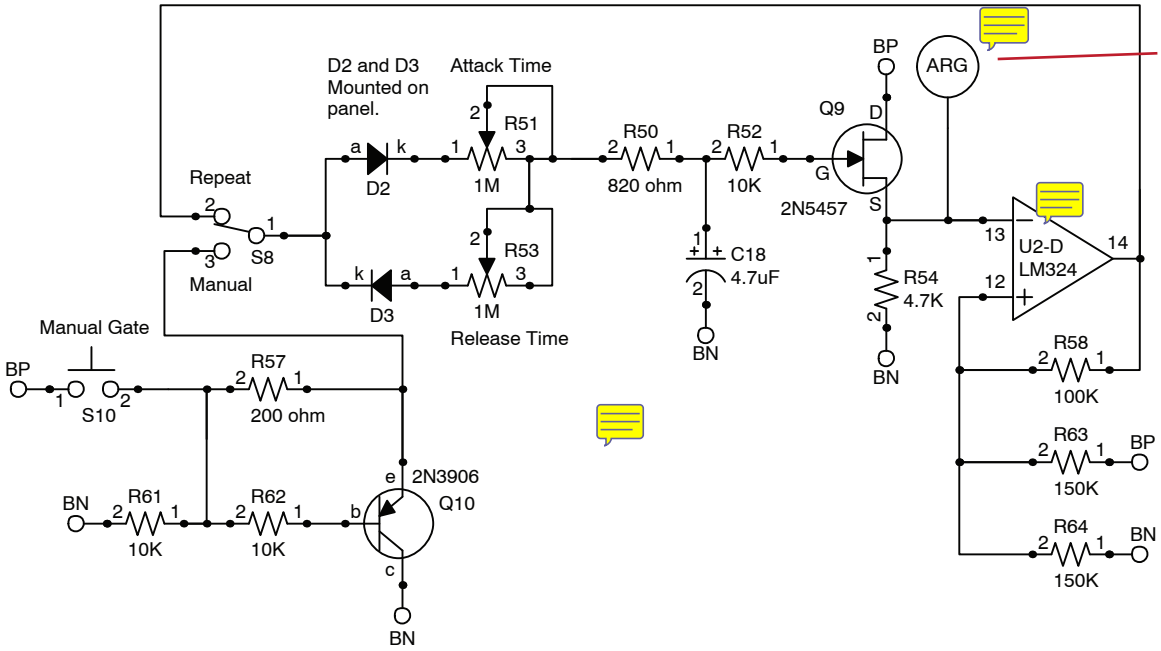

This is the only connection leading to other circuits. I think the LM324 is what is creating the envelope oscilation rather than a schmidt trigger as above.

How to I make the above circuit use this method of interacting with the VCF?