SYNTHESISER SEQUENCER

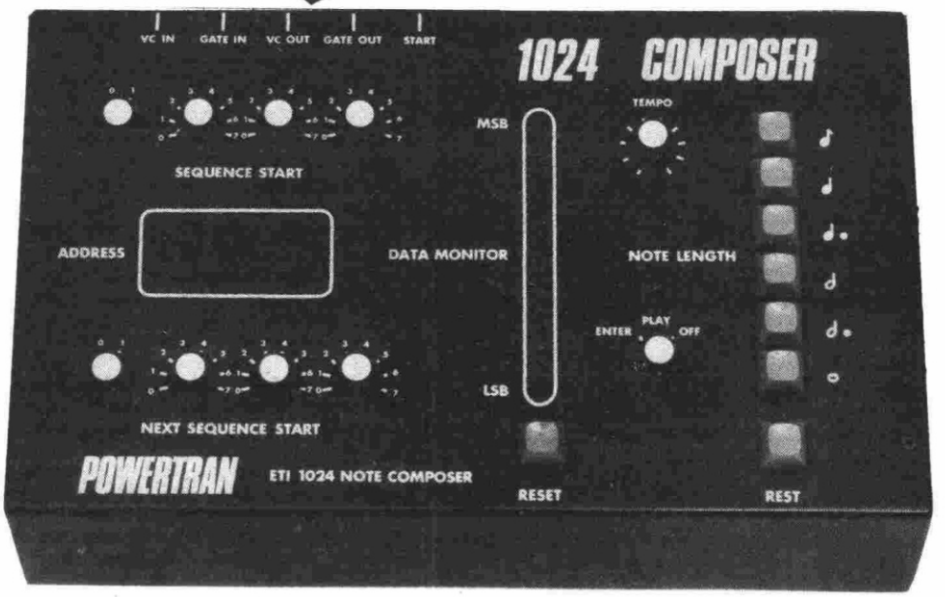

Treat your synth to this sequencer/composer and let it play sequences of up to 1024 notes. Design by Richard Becker of Powertran Electronics.

The 1024 composer is a machine which will repeatedly cause a synthesiser to play a pre-determined series of notes either as short sequences or a large composition of 1024 notes, ie several minutes long. The sequence can be of any number of notes from two to 1024. If the length is less than 1024 then the unused sections of the memory of the composer can be used for alternative sequences as there is full control over the starting and finishing points of the sequence. For example, 64 different 16-note sequences or 128 different eight-note sequences could be stored. The address of the note being played or entered is shown clearly on four seven-segment LED displays whilst the address at the beginning and end of the sequence selected are indicated by the position of the rotary switches which set them up.

The memory stores not only the pitch of the notes but also their length. There is a choice of six lengths ranging from half a beat to four beats. In addition, a rest or series of rests of one beat can be entered.

Socket To Me

The composer is programmed from the synthesiser by plugging into the VOLTAGE CONTROL OUT and GATE OUT sockets. Transcendent 2000 owners needn't feel left out! You can easily add a couple of jack sockets to the rear panel of the 2000 and fit three bits of wire; VC OUT to IC6 pin 6, GATE OUT to IC4 pin 6 and common line to common line on the HI OUT socket. As for any other synths without these sockets, if the handbook mentions 1 V/octave (the standard) you will be able to find the control voltage at the input of the VCO and the gate voltage at the input of the ADSR. The synth control voltage is converted to a digital code by an integrated A-to-D (analogue to digital) converter. An integrated D-to-A converter does the opposite on playback.

The outputs of the composer plug into the EXT VC IN and EX GATE IN sockets of the synth. Provision is made for the gate voltage to be of either polarity depending on the synth's requirement (the Transcendent 2000 requires a negative gate voltage). A synth usually sounds at its best when the filter is tracking with the VCO. If there is a control input for the VCF put the control voltage into here too. If there is no such socket it will be possible to find a suitable point on the VCF to inject the control voltage. On the Transcendent 2000 take VC IN to Q10 pin 12 via a 43k resistor.

Musical Memories

Now that we are plugged in, one of the note length switches is pressed. Pressing a key now programs in that note's pitch and length. To enter a rest, ie an interval with no note being played, press the rest switch followed by any key as many times as there are beats in the rest period.

It doesn't matter how long you take between entering notes. Go down to the pub in the middle of your composition if you like; it will still play back with perfect timing. What's more it doesn't matter if there's a power cut or anyone pulls out the plug while you're away. Hands up all those of you who have lost a painstakingly entered computer program that way! The com-

poser, though mains powered, has a trickle charged Nickel-Cadmium battery to supply the memory (which uses a pair of CMOS 4K synchronous RAMs) when there's no mains connected. After switch-off the memory will retain the data for months and will change only when reprogrammed. Should you find that you have entered a bum note — no hassle. Just advance the START-OF-SEQUENCE switches to the offending entry, press RESET, enter the correct note/note length combination. Take the address to where you left off, press RESET and carry on.

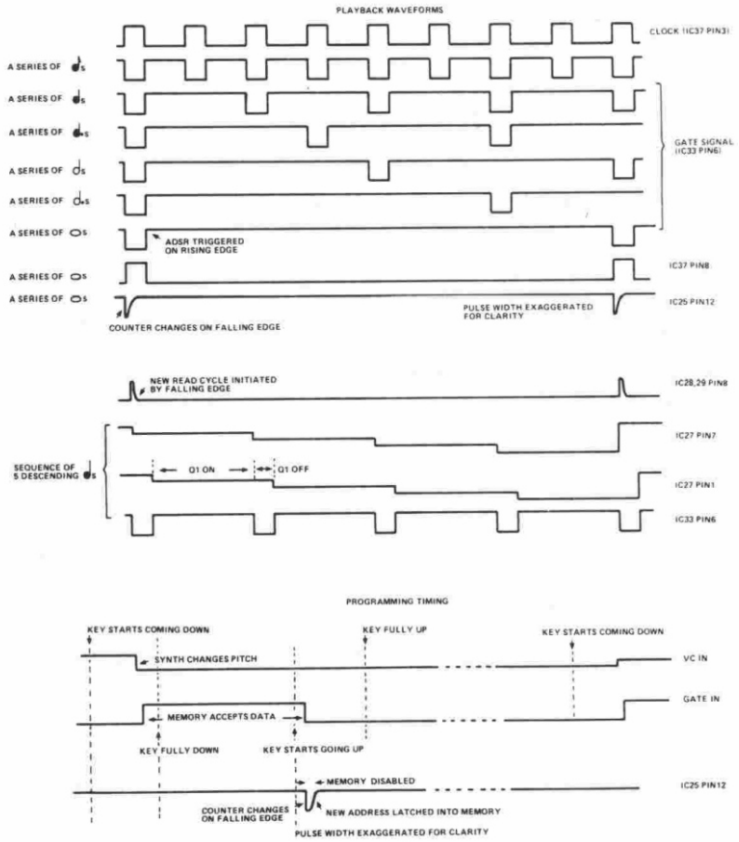

Fig.1 Waveforms at various points in the circuit during playback and programming.

Construction And Setting Up

The PCB is double-sided so start by linking the two sides with link pins, soldered to both sides, at the points indicated by black dots on the overlay. Now fit everything else except the displays. The tempo potentiometer is soldered to the side of the board which its pins enter. Mica washers are required under the 7915 and the 7815 to prevent shorting to the tracks. To fit the displays at the correct height above the board, stretch some 22 swg wire to stiffen it, cut 46 2" lengths and bend through 90° the last 3 mm of each one. Lay a 10 mm thick spacer bar across IC11-14 and lay the displays onto the spacer. Pass a wire through each hole in the displays and down into the PCB, solder the bent ends to the display, turn over the PCB, trim off the excess wire and solder in place. The photographs should make this clear.

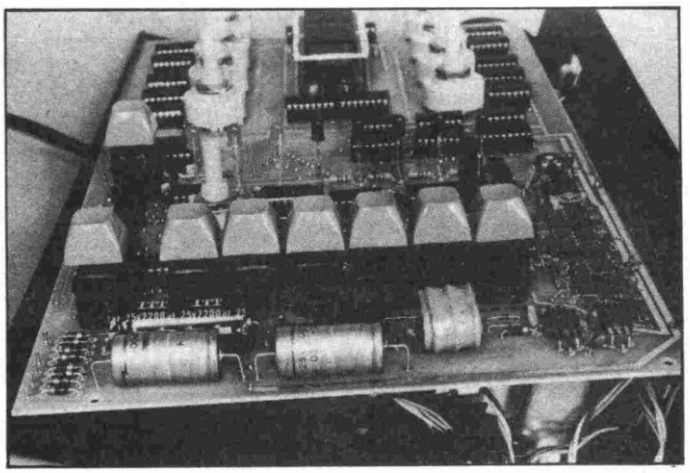

Above and below: All the switches except the start switch mount directly on the PCB. The photograph below also shows the mounting details of the display.

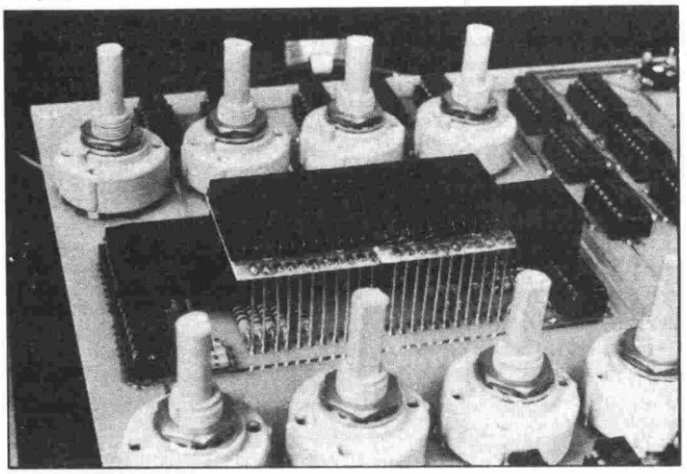

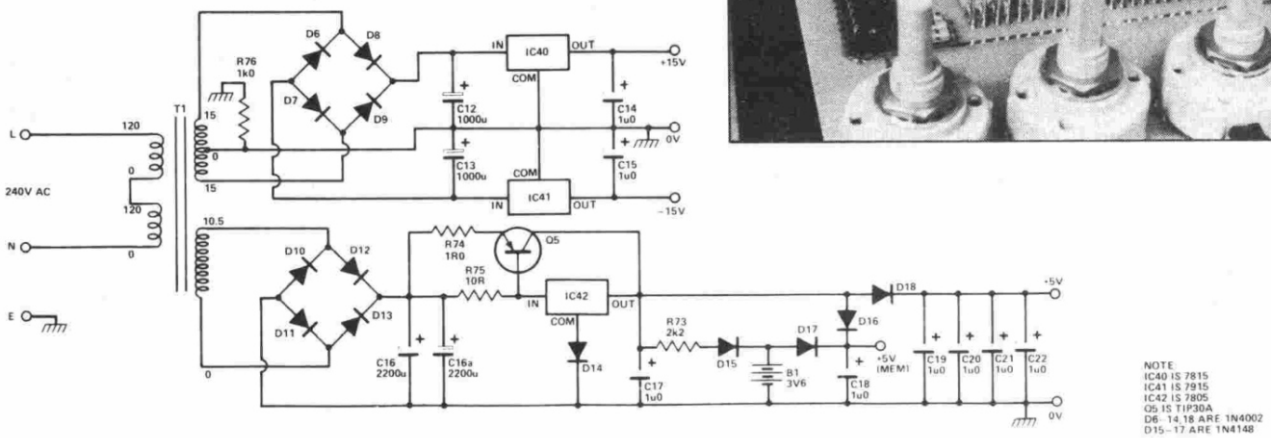

Fig.2 Circuit diagram for the power supply. Note that R76 (not given in the Parts List) solders directly to the mains transformer. See Fig.4.

PROJECT : Sequencer

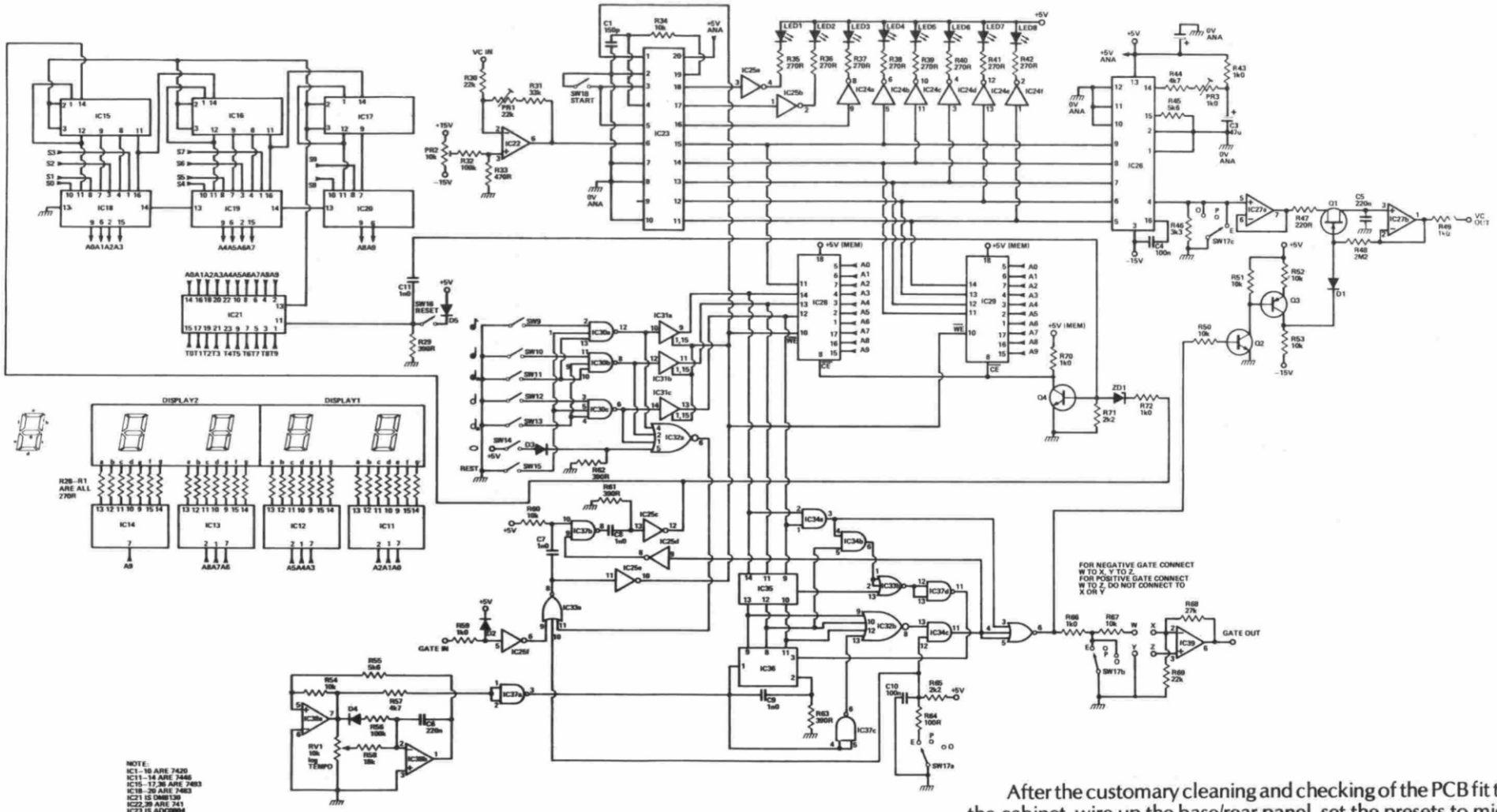

NOTE:
IC1–10 ARE 7420
IC11–14 ARE 7446
IC15–17,36 ARE 7493
IC18–20 ARE 7483
IC21 IS DM8130
IC22,39 ARE 741
IC23 IS ADC0804
IC24 IS 7404
IC25 IS 7414
IC26 IS DAC0808
IC27 IS TL082 OR LF353
IC28,29 ARE 6514
IC30 IS 7410
IC31 IS 74LS367
IC32 IS 7425
IC33 IS 7427
IC34 IS 7408
IC35 IS 7485
IC37 IS 74132
IC38 IS 1458
Q1 IS BF244C
Q2,4 ARE BC182L
Q3 IS BC212L
D1–5 ARE 1N4148
ZD1 IS 2V7 400mW ZENER
LED1–3 ARE TIL222
LED4–8 ARE TIL220
DISPLAY1,2 ARE NSW784
TTL MAY BE EITHER 74 SERIES OR 74LS SERIES

Fig.3 Circuit diagram of the composer. The binary encoding circuitry for the switches is shown below.

BUYLINES

A complete set of parts for this project including fully finished metalwork, nuts, bolts etc will be available from Powertran Electronics for £89.50 + VAT, post free. For delivery by Securicor add £2.50 (VAT inclusive). Powertran also supply separate parts eg. metalwork set, PCB etc — telephone Andover 64455 or write to:
Powertran Electronics, Portway Industrial Estate, Andover, Hants, SP10 3NM.

After the customary cleaning and checking of the PCB fit to the cabinet, wire up the base/rear panel, set the presets to midway and plug in. Switch to ENTER, press a NOTE LENGTH switch and the START switch together with any key. This starts the ADC converting and is done at each switch-on. Press the top note of the keyboard together with any NOTE LENGTH switch and adjust the input offset null preset (PR2) until the red LEDs are all off, whilst the green LEDs (indicating the three least significant bits which are not stored) show either binary 3 (011), ie bottom two LEDs on, or binary 4 (100), ie the third one up on. The LEDs may flicker between these states. Next press the key two octaves down and adjust the gain control PR1 so that only the top two of the red LEDs are on whilst the green ones again show binary 3 or 4. This ensures that the ADC is halfway between changing the code given by the five most significant bits.

HOW IT WORKS

The voltage control input (pitch data) is applied via IC22 to the A-to-D converter IC23 which produces an eight-bit binary code equivalent to the pitch voltage. C1 and R34, in conjunction with an internal Schmitt trigger, form the internal clock operating at a few hundred kilohertz. All eight bits are monitored by LEDs, driven by IC24 and IC25a and b, although only the five most significant bits are used. These go on a data bus connecting to the memory and the D-to-A converter IC26, the reference current for which enters pin 14. The quantized current from pin 4 generates a voltage across R46. Q1, C5, IC27b form a sample and hold circuit, controlled by the output gate signal. This permits a change in pitch only at the same time as the gate pulse starts. The output of IC26 changes a clock phase earlier.

IC1-10 encode the addresses set up on SW1-8 to the equivalent 10-bit binary codes. IC15-17 form a binary counter which is reset to all zeros at suitable times by the output of IC21. IC18-20 are binary adders which add the output of the counter to the output of IC1-5 to produce the address code for the memory. Thus when the counter is reset, the memory address is that set up by the START OF SEQUENCE switches SW1-4. The outputs of IC6-10 are compared with the memory address by the 10-bit comparator IC21 — a reset signal is generated when they are the same, so the sequence is finished and goes back to the start. The seven-segment displays are driven by the decoders IC11-14 which are connected to the memory address bus.

When entering data the counter is clocked by the gate pulse applied via IC25f, IC33a, IC37b, IC25c. Assuming the synth to be correctly adjusted with the pitch voltage changing *before* the gate signal is produced, the pitch voltage changes when a key goes down and the ADC generates the appropriate code. The gate signal then puts the memory into the write mode and enables the tri-state buffer IC31 and the ADC, entering the ADC data and the note length/rest data from IC30, IC31 into the memory. As the key is released the gate signal ceases, the memory is returned to the read mode and the buffer and ADC are disabled. The end of the gate signal results in a negative pulse from IC25c pin 12. On its negative going edge the counter adds one to the address. The pulse is also applied via Q4 to pin 8, the enable input of the memory, briefly disabling it. As pin 8 returns to 0 V the new address is latched in. The base of Q4 is also connected to the reset circuit so that the latched-in address is updated when the counter is reset.

IC38 is an asymmetric relaxation oscillator producing a 1:2 mark/space ratio pulse at IC37 pin 3, the negative edge of which clocks the divide-by-eight counter IC36. During playback the output of IC36 is compared with the note length/rest data by four bit comparator IC35. When there is equality IC35 pin 6 goes high and is applied to one of the two reset pins of IC36 via IC33b, IC37d. When the clock returns to high the other reset pin (pin 2) also goes high, resetting the counter. The counter therefore counts as far as the binary code from the memory, stays there for one phase of the clock and resets to zero. The all-zeros state of the counter is detected by IC32b, the output of which clocks the address counter. The clock (inverted) is applied to IC32 pin 13 to restrict its output to a single clock phase when the counter receives no reset ie when the note length is four beats and the memory reads out all zeros. The output of IC32b becomes the gate signal after passing through IC33c, which inhibits the gate when data '1X1' is detected by IC34a ie when there is a rest (101 programmed in). The counter is reset after two clock pulses by the output of IC34b. When there is a mains supply the logic receives 5 V via D18, the memory receives 5 V via D16 and the battery is charged via D15. D14 raises the output of IC42 from 5 V to about 5V6 to compensate for the drops across D16, D18. When there is no mains supply the logic is shut down but the memory still gets 3 V from the battery via D17. As the logic is all down Q4 turns off, disabling the memory so that only microamps are consumed.

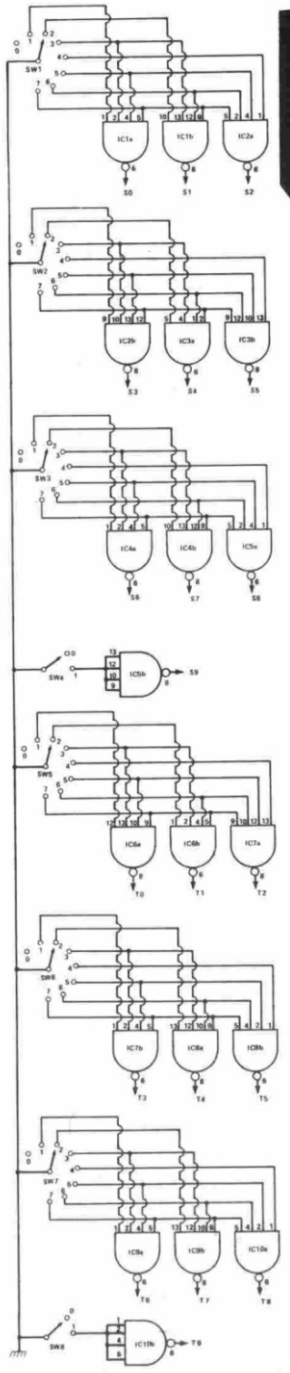

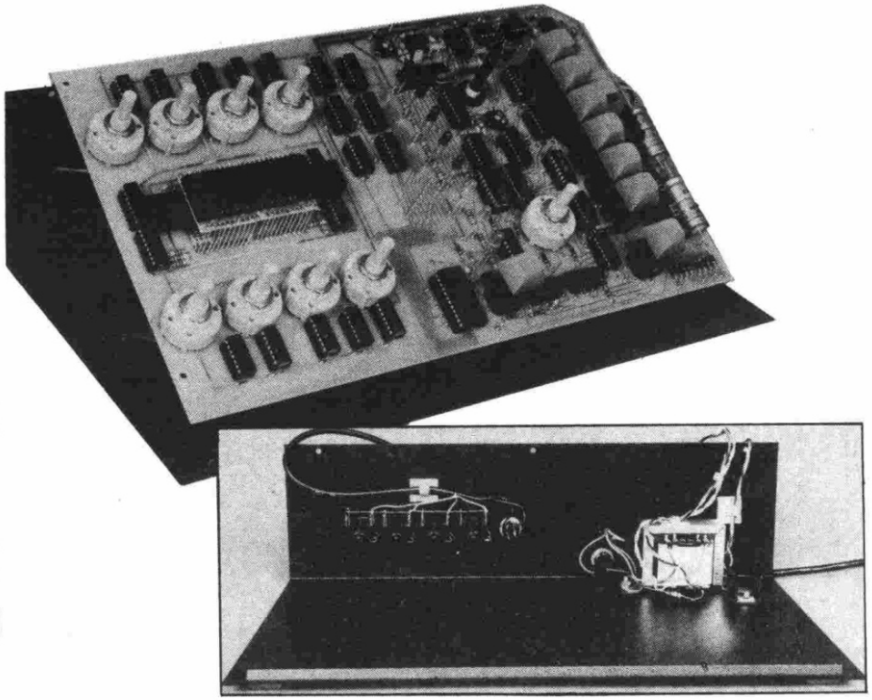

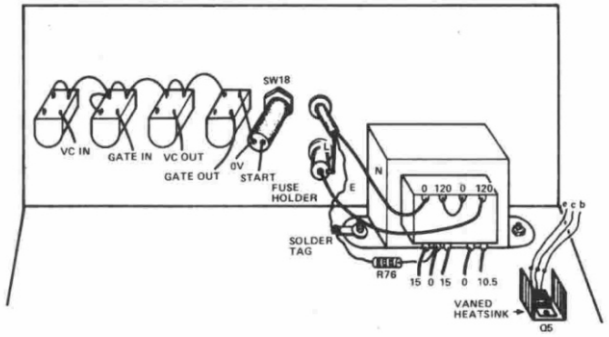

Fig.4 How to wire the off-board components.

Fig.5 (left) The switch encoder circuitry.

To confirm the correct encoding of each note, enter each one down the keyboard, switch to PLAY, press RESET and observe the red LEDs progressively showing a larger binary number.

Set the START OF NEXT SEQUENCE switches to 0003 and the START OF SEQUENCE switches to 0000, press RESET, enter the note two octaves down from the highest three times (any note length). Switch to PLAY with TEMPO halfway advanced and adjust PR3 for 2 V on VC OUT ie set the control voltage to 1 V/octave. Now you can bolt together the cabinet and start composing!

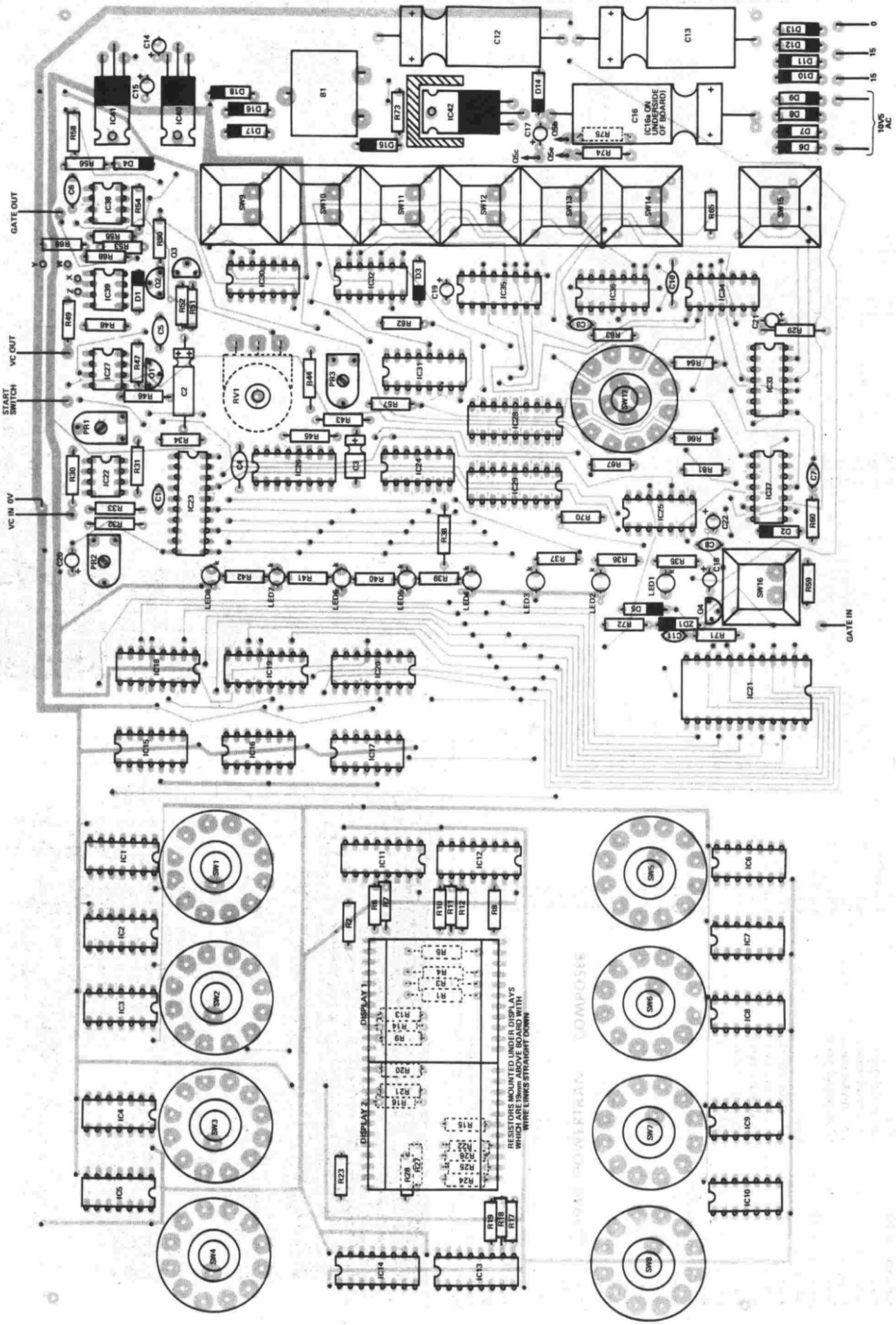

Fig.6 Overlay for the composer. The PCB is double-sided; note that this view is of the component side of the board and shows the copper tracks for that side. C16a is soldered underneath the board using the spare pads adjacent to C16.

PARTS LIST

Resistors (¼ W 5% carbon film except where stated)

R1-28, 35-42	270R
R29, 61, 62, 63	390R
R30	22k metal oxide
R31	33k metal oxide
R32	100k metal oxide
R33	470R metal oxide
R34, 50, 51, 52, 54, 60, 67	10k
R43	1k0 metal oxide
R44	4k7 metal oxide
R45	5k6 metal oxide
R46	3k3 metal oxide
R47	220R
R48	2M2
R49, 59, 66, 70, 72,	1k0
R53	47k
R55	5k6
R56	100k
R57	4k7
R58	18k
R64	100R
R65, 71, 73	2k2
R68	27k
R69	22k
R74	1R0
R75	10R

Potentiometers

RV1	10k logarithmic
PR1	22k cermet preset
PR2	10k miniature horizontal preset
PR3	1k0 miniature horizontal preset

Capacitors

C1	150p ceramic
C2	220u 10 V axial electrolytic
C3	47u 10 V axial electrolytic
C4, 10	100n polyester
C5, 6	220n polycarbonate
C7, 8, 9, 11	1n0 ceramic
C12, 13	1000u 25 V axial electrolytic
C14, 15, 17-22	1u0 tantalum
C16, 16a	2200u 25 V axial electrolytic

Semiconductors

IC1-10	7420
IC11-14	7446
IC15-17, 36	7493
IC18-20	7483
IC21	DM8130
IC22, 39	741
IC23	ADC0804
IC24	7404
IC25	7414
IC26	DAC0808
IC27	TL082 or LF353
IC28, 29	6514
IC30	7410
IC31	74LS367
IC32	7425
IC33	7427
IC34	7408
IC35	7485
IC37	74132
IC38	1458
IC40	7815
IC41	7915
IC42	7805
Q1	BF244C
Q2, 4	BC182L
Q3	BC212L
Q5	TIP30A
D1-5, 15-17	1N4148
D6-14, 18	1N4002
ZD1	2V7 400 mW
LED1-3	TIL222
LED4-8	TIL220
DISPLAY 1, 2	NSN784

TTL may be either 74 series or 74LS series

Switches

SW1-8	1-pole 12-way rotary with adjustable stop
SW9-16	keyboard 1-pole momentary make with 19 mm caps
SW17	4-pole 3-way rotary
SW18	panel-mounting momentary make

Miscellaneous

IC sockets, 3V6 Ni-Cd PCB-mounting battery, TV5 heatsink (2 off), transformer (secondaries 15-0-15 @ 100 mA, 10V5 @ 1 A), fuse holder, double-sided PCB, jack sockets (4 off), cabinet, spacers etc.

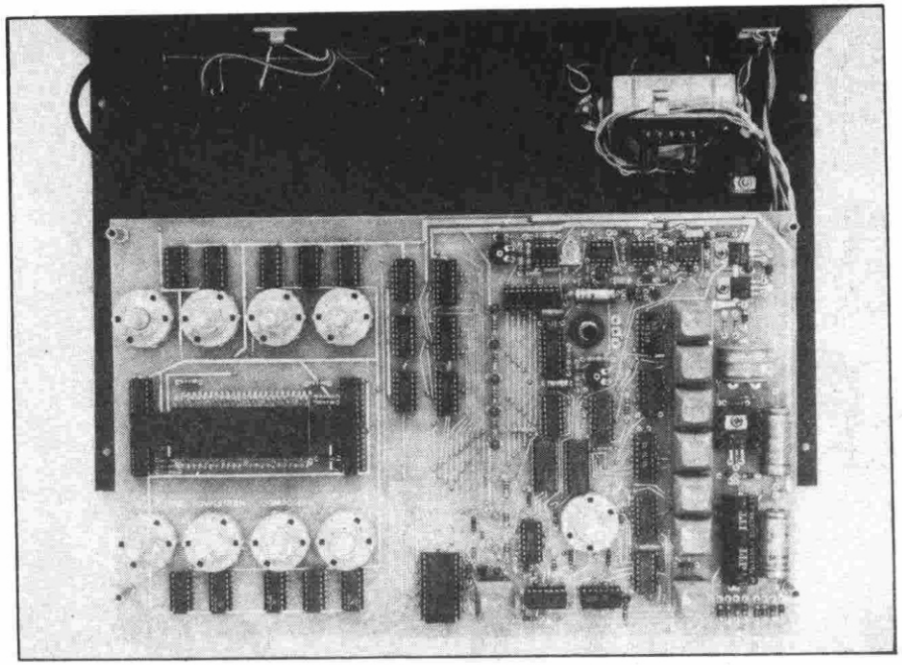

The complete PCB, with wiring finished and ready for fixing to the front panel.

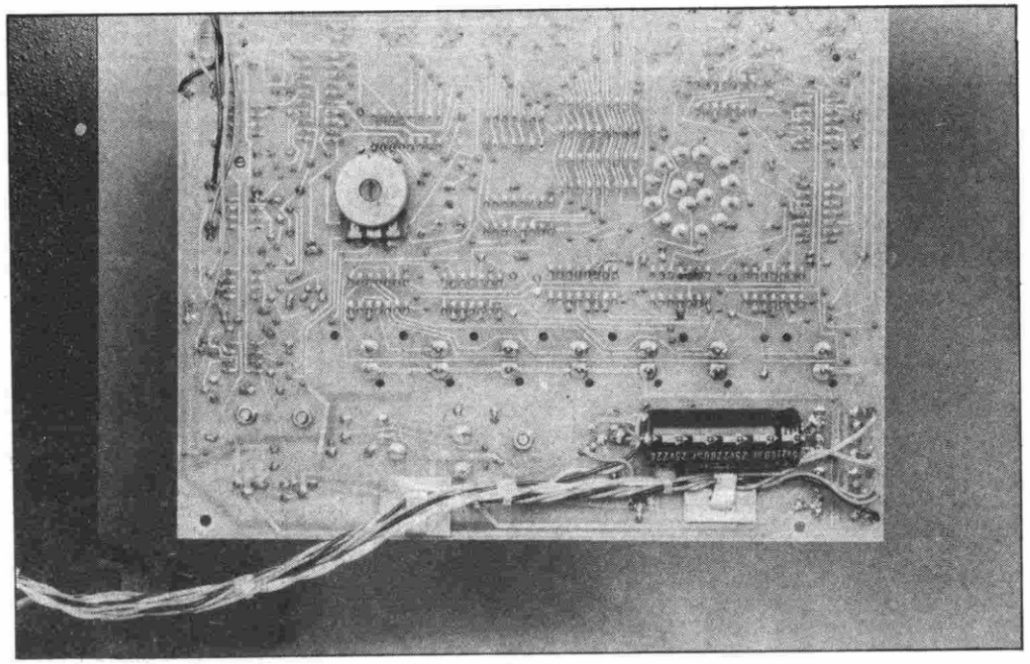

Underside of the PCB showing RV1 and C16a in place.