FM25V10

1Mb Serial 3V F-RAM Memory

Features

1M bit Ferroelectric Nonvolatile RAM
- Organized as 128K x 8 bits
- High Endurance 100 Trillion (10^{14}) Read/Writes
- 10 Year Data Retention
- NoDelay™ Writes
- Advanced High-Reliability Ferroelectric Process

Very Fast Serial Peripheral Interface - SPI
- Up to 40 MHz Frequency
- Direct Hardware Replacement for Serial Flash
- SPI Mode 0 & 3 (CPOL, CPHA=0,0 & 1,1)

Write Protection Scheme
- Hardware Protection
- Software Protection

Device ID and Serial Number
- Device ID reads out Manufacturer ID & Part ID
- Unique Serial Number (FM25VN10)

Low Voltage, Low Power
- Low Voltage Operation 2.0V – 3.6V
- 90 µA Standby Current (typ.)
- 5 µA Sleep Mode Current (typ.)

Industry Standard Configurations
- Industrial Temperature -40°C to +85°C
- 8-pin "Green"/RoHS SOIC Package

Description

The FM25V10 is a 1-megabit nonvolatile memory employing an advanced ferroelectric process. A ferroelectric random access memory or F-RAM is nonvolatile and performs reads and writes like a RAM. It provides reliable data retention for 10 years while eliminating the complexities, overhead, and system level reliability problems caused by Serial Flash and other nonvolatile memories.

Unlike Serial Flash, the FM25V10 performs write operations at bus speed. No write delays are incurred. Data is written to the memory array immediately after it has been transferred to the device. The next bus cycle may commence without the need for data polling. The product offers very high write endurance, orders of magnitude more endurance than Serial Flash. Also, F-RAM exhibits lower power consumption than Serial Flash.

These capabilities make the FM25V10 ideal for nonvolatile memory applications requiring frequent or rapid writes or low power operation. Examples range from data collection, where the number of write cycles may be critical, to demanding industrial controls where the long write time of Serial Flash can cause data loss.

The FM25V10 provides substantial benefits to users of Serial Flash as a hardware drop-in replacement. The devices use the high-speed SPI bus, which enhances the high-speed write capability of F-RAM technology. The FM25VN10 is offered with a unique serial number that is read-only and can be used to identify a board or system. Both devices incorporate a read-only Device ID that allows the host to determine the manufacturer, product density, and product revision. The devices are guaranteed over an industrial temperature range of -40°C to +85°C.

Pin Configuration

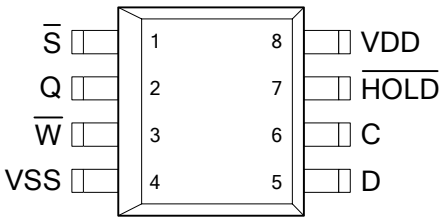

Pin Name	Function
/S	Chip Select
/W	Write Protect
/HOLD	Hold
C	Serial Clock
D	Serial Data Input
Q	Serial Data Output
VDD	Supply Voltage
VSS	Ground

This is a product that has fixed target specifications but are subject to change pending characterization results.

Ramtron International Corporation
1850 Ramtron Drive, Colorado Springs, CO 80921
(800) 545-FRAM, (719) 481-7000
http://www.ramtron.com

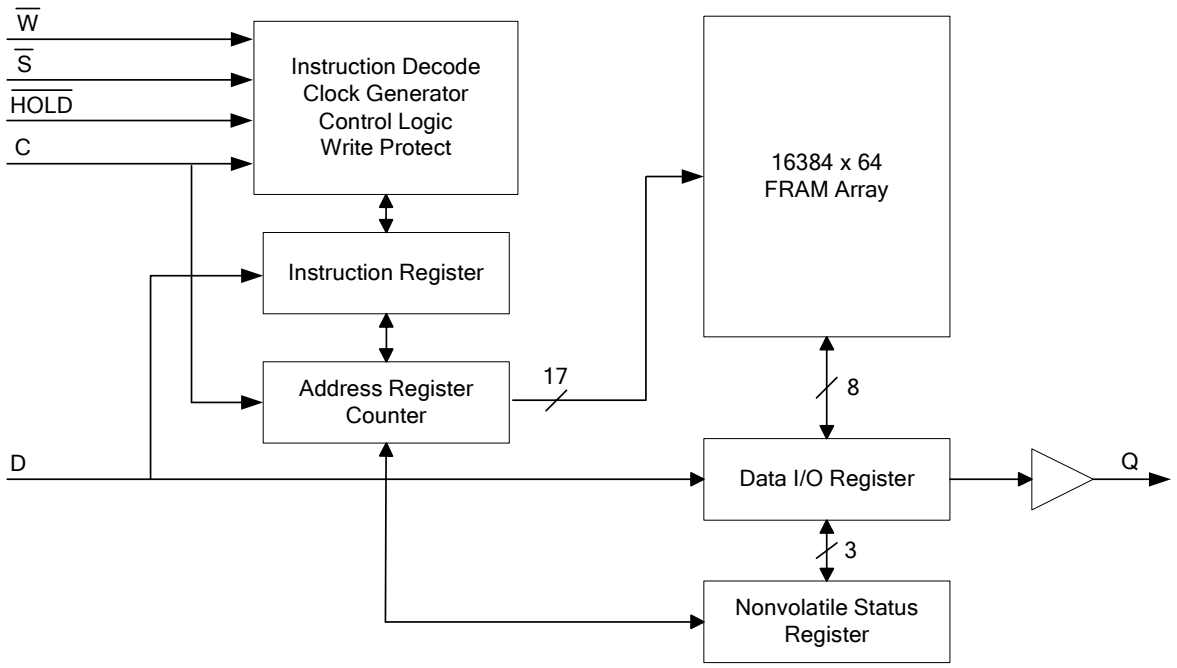

Figure 1. Block Diagram

Pin Descriptions

Pin Name	I/O	Description
/S	Input	Chip Select: This active-low input activates the device. When high, the device enters low-power standby mode, ignores other inputs, and all outputs are tri-stated. When low, the device internally activates the C signal. A falling edge on /S must occur prior to every op-code.
C	Input	Serial Clock: All I/O activity is synchronized to the serial clock. Inputs are latched on the rising edge and outputs occur on the falling edge. Since the device is static, the clock frequency may be any value between 0 and 40 MHz and may be interrupted at any time.
/HOLD	Input	Hold: The /HOLD pin is used when the host CPU must interrupt a memory operation for another task. When /HOLD is low, the current operation is suspended. The device ignores any transition on C or /S. All transitions on /HOLD must occur while C is low. This pin has a weak internal pull-up (see R_{IN} spec, pg 11). However, if it is not used, the /HOLD pin should be tied to V_{DD}.
/W	Input	Write Protect: This active-low pin prevents write operations to the Status Register only. A complete explanation of write protection is provided on pages 6 and 7. If it is not used, the /W pin should be tied to V_{DD}.
D	Input	Serial Input: All data is input to the device on this pin. The pin is sampled on the rising edge of C and is ignored at other times. It should always be driven to a valid logic level to meet I_{DD} specifications. * D may be connected to Q for a single pin data interface.
Q	Output	Serial Output: This is the data output pin. It is driven during a read and remains tri-stated at all other times including when /HOLD is low. Data transitions are driven on the falling edge of the serial clock. * Q may be connected to D for a single pin data interface.
VDD	Supply	Power Supply
VSS	Supply	Ground

Overview

The FM25V10 is a serial F-RAM memory. The memory array is logically organized as 131,072 x 8 and is accessed using an industry standard Serial Peripheral Interface or SPI bus. Functional operation of the F-RAM is similar to Serial Flash. The major differences between the FM25V10 and a Serial Flash with the same pinout are the F-RAM's superior write performance, very high endurance, and lower power consumption.

Memory Architecture

When accessing the FM25V10, the user addresses 128K locations of 8 data bits each. These data bits are shifted serially. The addresses are accessed using the SPI protocol, which includes a chip select (to permit multiple devices on the bus), an op-code, and a three-byte address. The complete address of 17-bits specifies each byte address uniquely.

Most functions of the FM25V10 either are controlled by the SPI interface or are handled automatically by on-board circuitry. The access time for memory operation is essentially zero, beyond the time needed for the serial protocol. That is, the memory is read or written at the speed of the SPI bus. Unlike Serial Flash, it is not necessary to poll the device for a ready condition since writes occur at bus speed. So, by the time a new bus transaction can be shifted into the device, a write operation will be complete. This is explained in more detail in the interface section.

Users expect several obvious system benefits from the FM25V10 due to its fast write cycle and high endurance as compared to Serial Flash. In addition there are less obvious benefits as well. For example in a high noise environment, the fast-write operation is less susceptible to corruption than Serial Flash since it is completed quickly. By contrast, Serial Flash requiring milliseconds to write is vulnerable to noise during much of the cycle.

Serial Peripheral Interface – SPI Bus

The FM25V10 employs a Serial Peripheral Interface (SPI) bus. It is specified to operate at speeds up to 40MHz. This high-speed serial bus provides high performance serial communication to a host microcontroller. Many common microcontrollers have hardware SPI ports allowing a direct interface. It is quite simple to emulate the port using ordinary port pins for microcontrollers that do not. The FM25V10 operates in SPI Mode 0 and 3.

Protocol Overview

The SPI interface is a synchronous serial interface using clock and data pins. It is intended to support multiple devices on the bus. Each device is activated using a chip select. Once chip select is activated by the bus master, the FM25V10 will begin monitoring the clock and data lines. The relationship between the falling edge of /S, the clock and data is dictated by the SPI mode. The device will make a determination of the SPI mode on the falling edge of each chip select. While there are four such modes, the FM25V10 supports only modes 0 and 3. Figure 2 shows the required signal relationships for modes 0 and 3. For both modes, data is clocked into the FM25V10 on the rising edge of C and data is expected on the first rising edge after /S goes active. If the clock starts from a high state, it will fall prior to the first data transfer in order to create the first rising edge.

The SPI protocol is controlled by op-codes. These op-codes specify the commands to the device. After /S is activated the first byte transferred from the bus master is the op-code. Following the op-code, any addresses and data are then transferred.

Certain op-codes are commands with no subsequent data transfer. The /S must go inactive after an operation is complete and before a new op-code can be issued. There is one valid op-code only per active chip select.

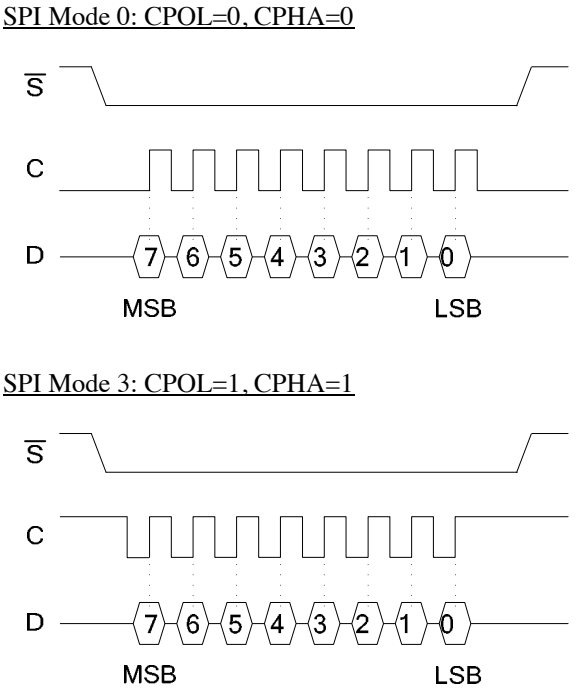

Figure 2. SPI Modes 0 & 3

System Hookup

The SPI interface uses a total of four pins: clock, data-in, data-out, and chip select. A typical system configuration uses one or more FM25V10 devices with a microcontroller that has a dedicated SPI port, as Figure 3 illustrates. Note that the clock, data-in, and data-out pins are common among all devices. The Chip Select and Hold pins must be driven separately for each FM25V10 device.

For a microcontroller that has no dedicated SPI bus, a general purpose port may be used. To reduce hardware resources on the controller, it is possible to connect the two data pins together and tie off the Hold pin. Figure 4 shows a configuration that uses only three pins.

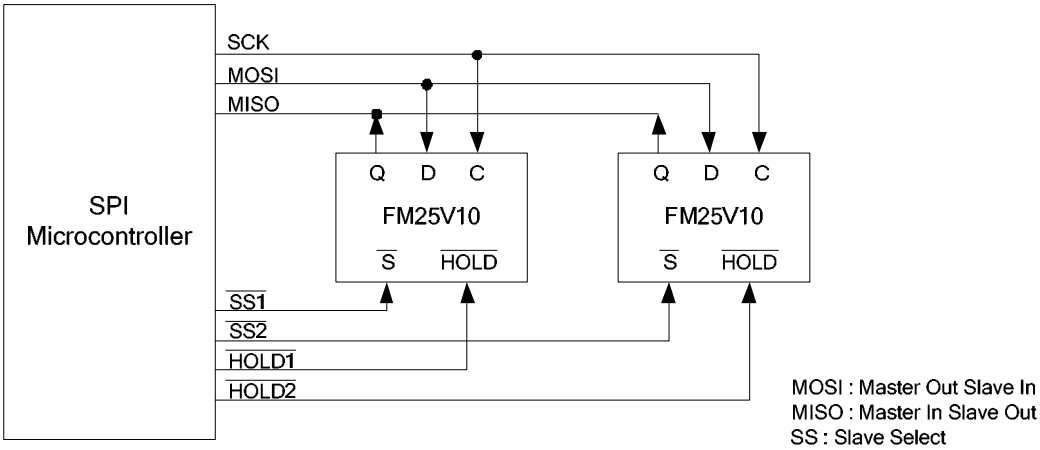

Figure 3. 2Mbit (256KB) System Configuration with SPI port

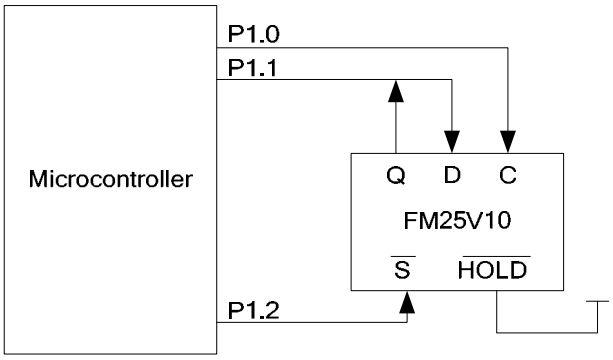

Figure 4. System Configuration without SPI port

Power Up to First Access

The FM25V10 is not accessible for a period of time (t_{PU}) after power up. Users must comply with the timing parameter t_{PU}, which is the minimum time from V_{DD} (min) to the first /S low.

Data Transfer

All data transfers to and from the FM25V10 occur in 8-bit groups. They are synchronized to the clock signal (C), and they transfer most significant bit (MSB) first. Serial inputs are registered on the rising edge of C. Outputs are driven from the falling edge of clock C.

Command Structure

There are ten commands called op-codes that can be issued by the bus master to the FM25V10. They are listed in the table below. These op-codes control the functions performed by the memory. They can be divided into three categories. First, there are commands that have no subsequent operations. They perform a single function, such as to enable a write operation. Second are commands followed by one byte, either in or out. They operate on the Status Register. The third group includes commands for memory transactions followed by address and one or more bytes of data.

Table 1. Op-code Commands

Name	Description	Op-code
WREN	Set Write Enable Latch	0000 0110b
WRDI	Write Disable	0000 0100b
RDSR	Read Status Register	0000 0101b
WRSR	Write Status Register	0000 0001b
READ	Read Memory Data	0000 0011b
FSTRD	Fast Read Memory Data	0000 1011b
WRITE	Write Memory Data	0000 0010b
SLEEP	Enter Sleep Mode	1011 1001b
RDID	Read Device ID	1001 1111b
SNR	Read S/N	1100 0011b

WREN – Set Write Enable Latch

The FM25V10 will power up with writes disabled. The WREN command must be issued prior to any write operation. Sending the WREN op-code will allow the user to issue subsequent op-codes for write operations. These include writing the Status Register (WRSR), writing the memory (WRITE), writing the serial number (SNW), and locking the serial number (SNLW).

Sending the WREN op-code causes the internal Write Enable Latch to be set. A flag bit in the Status Register, called WEL, indicates the state of the latch. WEL=1 indicates that writes are permitted. Attempting to write the WEL bit in the Status Register has no effect on the state of this bit. Completing any write operation will automatically clear the write-enable latch and prevent further writes without another WREN command. Figure 5 below illustrates the WREN command bus configuration.

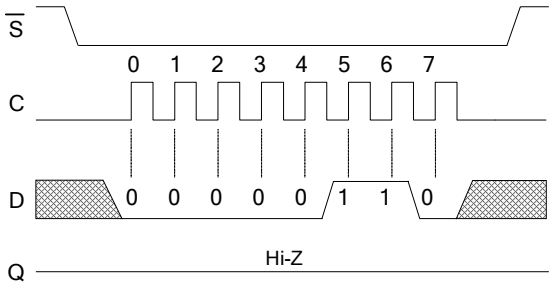

Figure 5. WREN Bus Configuration

WRDI – Write Disable

The WRDI command disables all write activity by clearing the Write Enable Latch. The user can verify that writes are disabled by reading the WEL bit in the Status Register and verifying that WEL=0. Figure 6 illustrates the WRDI command bus configuration.

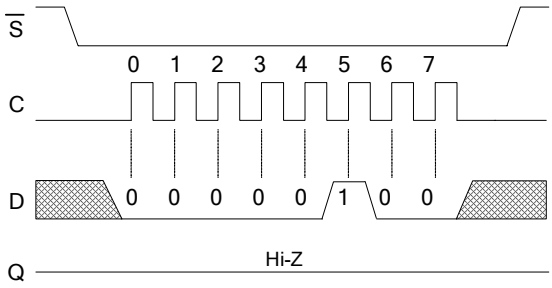

Figure 6. WRDI Bus Configuration

RDSR – Read Status Register

The RDSR command allows the bus master to verify the contents of the Status Register. Reading Status provides information about the current state of the write protection features. Following the RDSR op-code, the FM25V10 will return one byte with the contents of the Status Register. The Status Register is described in detail in the section below.

WRSR – Write Status Register

The WRSR command allows the user to select certain write protection features by writing a byte to the Status Register. Prior to issuing a WRSR command, the /W pin must be high or inactive. Prior to sending the WRSR command, the user must send a WREN command to enable writes. Note that executing a WRSR command is a write operation and therefore clears the Write Enable Latch. The bus configuration of RDSR and WRSR are shown below.

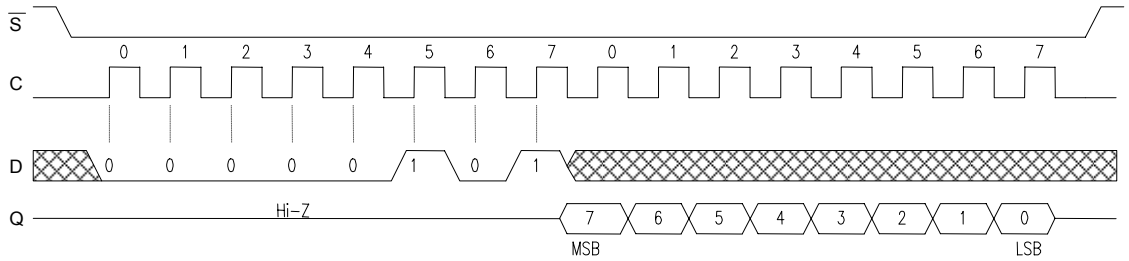

Figure 7. RDSR Bus Configuration

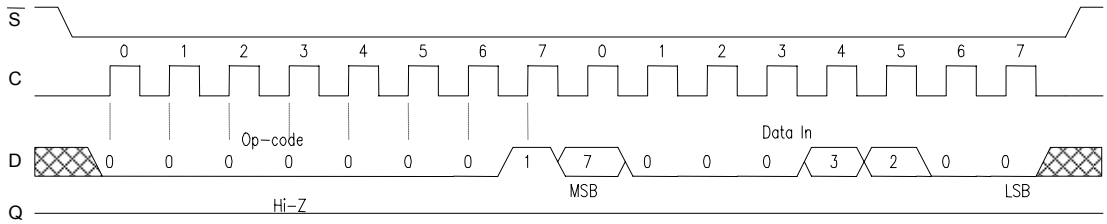

Figure 8. WRSR Bus Configuration

Status Register & Write Protection

The write protection features of the FM25V10 are multi-tiered. Taking the /W pin to a logic low state is the hardware write-protect function. Status Register write operations are blocked when /W is low. To write the memory with /W high, a WREN op-code must first be issued. Assuming that writes are enabled using WREN and by /W, writes to memory are controlled by the Status Register. As described above, writes to the Status Register are performed using the WRSR command and subject to the /W pin. The Status Register is organized as follows.

Table 2. Status Register

Bit	7	6	5	4	3	2	1	0
Name	WPEN	1	0	0	BP1	BP0	WEL	0

Bits 0, 4, 5 are fixed at 0 and bit 6 is fixed at 1, and none of these bits can be modified. Note that bit 0 ("Ready" in Serial Flash) is unnecessary as the F-RAM writes in real-time and is never busy, so it reads out as a '0'. There is an exception to this when the device is waking up from Sleep Mode, which is described on the following page. The BP1 and BP0 control software write protection features. They are nonvolatile (shaded yellow). The WEL flag indicates the state of the Write Enable Latch. Attempting to directly write the WEL bit in the Status Register has no effect on its state. This bit is internally set and cleared via the WREN and WRDI commands, respectively.

BP1 and BP0 are memory block write protection bits. They specify portions of memory that are write-protected as shown in the following table.

Table 3. Block Memory Write Protection

BP1	BP0	Protected Address Range
0	0	None
0	1	18000h to 1FFFFh (upper ¼)
1	0	10000h to 1FFFFh (upper ½)
1	1	00000h to 1FFFFh (all)

The BP1 and BP0 bits and the Write Enable Latch are the only mechanisms that protect the memory from writes. The remaining write protection features protect inadvertent changes to the block protect bits.

The WPEN bit controls the effect of the hardware /W pin. When WPEN is low, the /W pin is ignored. When WPEN is high, the /W pin controls write access to the Status Register. Thus the Status Register is write protected if WPEN=1 and /W=0.

This scheme provides a write protection mechanism, which can prevent software from writing the memory

under any circumstances. This occurs if the BP1 and BP0 bits are set to 1, the WPEN bit is set to 1, and the /W pin is low. This occurs because the block protect bits prevent writing memory and the /W signal in hardware prevents altering the block protect bits (if WPEN is high). Therefore in this condition, hardware must be involved in allowing a write operation. The following table summarizes the write protection conditions.

Table 4. Write Protection

WEL	WPEN	/W	Protected Blocks	Unprotected Blocks	Status Register
0	X	X	Protected	Protected	Protected
1	0	X	Protected	Unprotected	Unprotected
1	1	0	Protected	Unprotected	Protected
1	1	1	Protected	Unprotected	Unprotected

Memory Operation

The SPI interface, which is capable of a relatively high clock frequency, highlights the fast write capability of the F-RAM technology. Unlike Serial Flash, the FM25V10 can perform sequential writes at bus speed. No page buffer is needed and any number of sequential writes may be performed.

Write Operation

All writes to the memory array begin with a WREN op-code. The next op-code is the WRITE instruction. This op-code is followed by a three-byte address value, which specifies the 17-bit address of the first data byte of the write operation. Subsequent bytes are data and they are written sequentially. Addresses are incremented internally as long as the bus master continues to issue clocks. If the last address of 1FFFFh is reached, the counter will roll over to 00000h. Data is written MSB first. A write operation is shown in Figure 9.

Unlike Serial Flash, any number of bytes can be written sequentially and each byte is written to memory immediately after it is clocked in (after the 8th clock). The rising edge of /S terminates a WRITE op-code operation. Asserting /W active in the middle of a write operation will have no effect until the next falling edge of /S.

Read Operation

After the falling edge of /S, the bus master can issue a READ op-code. Following this instruction is a three-byte address value (A16-A0), specifying the address of the first data byte of the read operation. After the op-code and address are complete, the D pin is ignored. The bus master issues 8 clocks, with one bit read out for each. Addresses are incremented internally as long as the bus master continues to issue clocks. If the last address of 1FFFFh is reached, the counter will roll over to 00000h. Data is read MSB first. The rising edge of /S terminates a READ op-code operation and tri-states the Q pin. A read operation is shown in Figure 10.

Fast Read Operation

The FM25V10 supports the FAST READ op-code (0Bh) that is found on Serial Flash devices. It is implemented for code compatibility with Serial Flash devices. Following this instruction is a three-byte address (A16-A0), specifying the address of the first data byte of the read operation. A dummy byte follows the address. It inserts one byte of read latency. The D pin is ignored after the op-code, 3-byte address, and dummy byte are complete. The bus master issues 8 clocks, with one bit read out for each. The Fast Read operation is otherwise the same as an ordinary READ. If the last address of 1FFFFh is reached, the counter will roll over to 00000h. Data is read MSB first. The rising edge of /S terminates a FAST READ op-code operation and tri-states the Q pin. A Fast Read operation is shown in Figure 11.

Hold

The FM25V10 and FM25VN10 devices have a /HOLD pin that can be used to interrupt a serial operation without aborting it. If the bus master pulls the /HOLD pin low while C is low, the current operation will pause. Taking the /HOLD pin high while C is low will resume an operation. The transitions of /HOLD must occur while C is low, but the C and /S pins can toggle during a hold state.

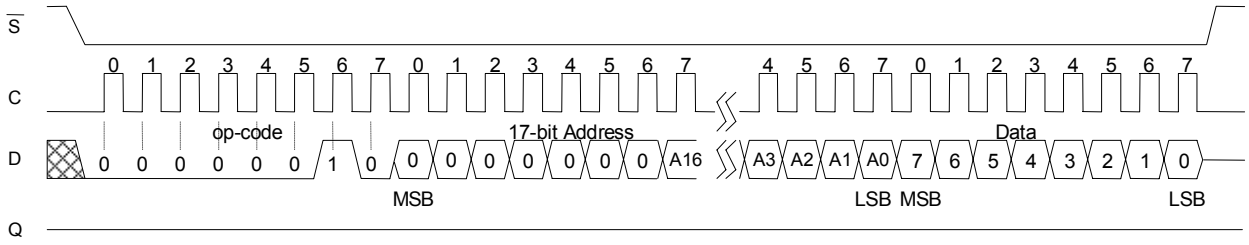

Figure 9. Memory Write with 3-Byte Address

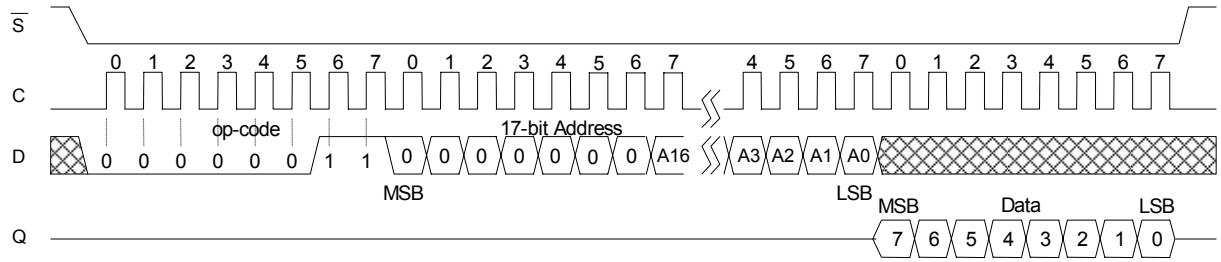

Figure 10. Memory Read with 3-Byte Address

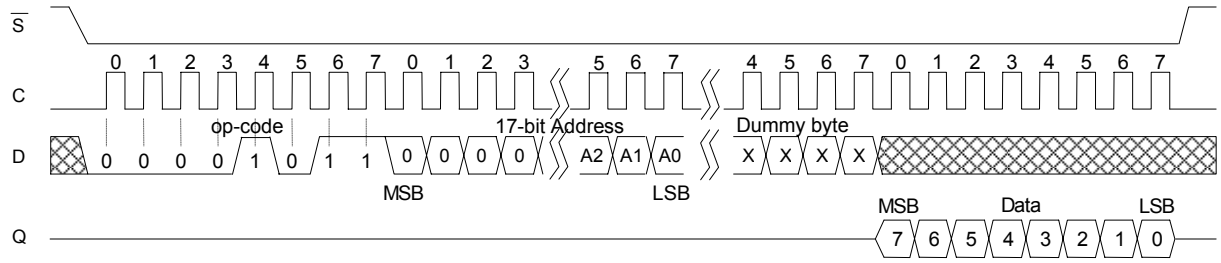

Figure 11. Fast Read with 3-Byte Address and Dummy Byte

Sleep Mode

A low power mode called Sleep Mode is implemented on both FM25V10 and FM25VN10 devices. The device will enter this low power state when the SLEEP op-code B9h is clocked-in and a rising edge of /S is applied. Once in sleep mode, the C and D pins are ignored and Q will be high-Z, but the device continues to monitor the /S pin. On the next falling edge of /S, the device will return to normal operation within t_{REC} (400 µs max.). The Q pin remains in a hi-Z state during the wakeup period. The device will not necessarily respond to an opcode within the wakeup period. To start the wakeup procedure, the controller may send a "dummy" read, for example, and wait the remaining t_{REC} time.

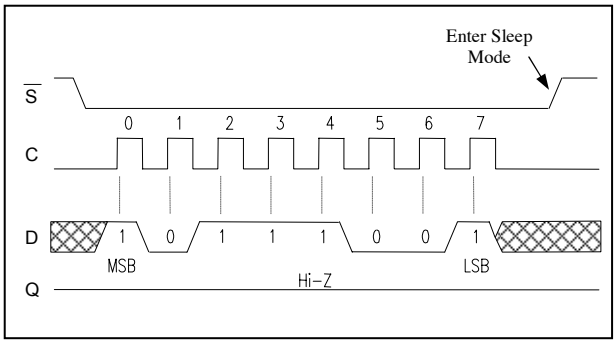

Figure 12. Sleep Mode Entry

Device ID

The FM25V10 and FM25VN10 devices can be interrogated for its manufacturer, product identification, and die revision. The RDID op-code 9Fh allows the user to read the manufacturer ID and product ID, both of which are read-only bytes. The JEDEC-assigned manufacturer ID places the Ramtron identifier in bank 7, therefore there are six bytes of the continuation code 7Fh followed by the single byte C2h. There are two bytes of product ID, which includes a Family code, a Density code, a Sub code, and Product Revision code.

Table 6. Manufacturer and Product ID

	Bit									
	7	6	5	4	3	2	1	0	Hex	
Manufacturer ID	0	1	1	1	1	1	1	1	7F	Continuation code
	0	1	1	1	1	1	1	1	7F	Continuation code
	0	1	1	1	1	1	1	1	7F	Continuation code
	0	1	1	1	1	1	1	1	7F	Continuation code
	0	1	1	1	1	1	1	1	7F	Continuation code
	0	1	1	1	1	1	1	1	7F	Continuation code
	1	1	0	0	0	0	1	0	C2	JEDEC assigned Ramtron C2h in bank 7

	Family			Density					Hex	
Device ID (1st Byte)	0	0	1	0	0	1	0	0	24h	Density: 02h=256K, 03h=512K, 04=1M
	Sub		Rev.			Rsvd				
Device ID (2nd Byte)	0	0	0	0	0	0	0	0	00h	00h=FM25V10, 01h=FM25VN10, 02h=FM25VR10, 03h=FM25VRN10

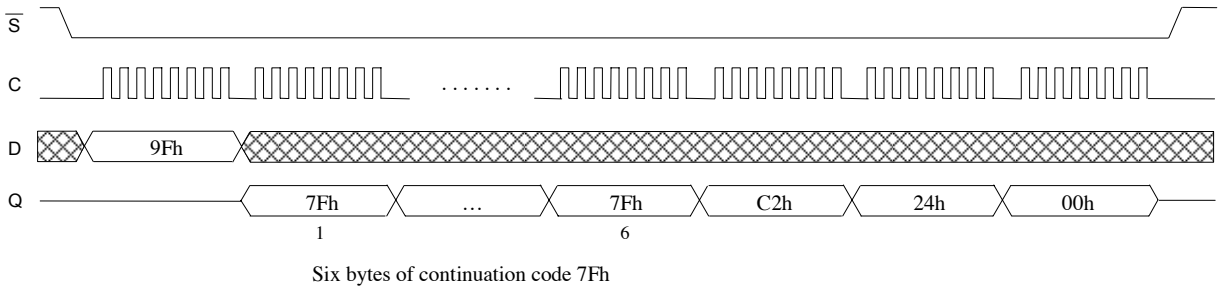

Figure 13. Read Device ID

Unique Serial Number (FM25VN10 only)

The FM25VN10 device incorporates a read-only 8-byte serial number. It can be used to uniquely identify a pc board or system. The serial number includes a 40-bit unique number, an 8-bit CRC, and a 16-bit number that can be defined upon request by the customer. If a customer-specific number is not requested, the 16-bit Customer Identifier is 0x0000.

The serial number is read by issuing the SNR op-code (C3h).

The 8-bit CRC value can be used to compare to the value calculated by the controller. If the two values match, then the communication between slave and master was performed without errors.

CUSTOMER IDENTIFIER *		40-bit UNIQUE NUMBER					8-bit CRC
SN(63:56)	SN(55:48)	SN(47:40)	SN(39:32)	SN(31:24)	SN(23:16)	SN(15:8)	SN(7:0)

* Contact factory for requesting a customer identifier number.

Figure 14. 8-Byte Serial Number (read-only)

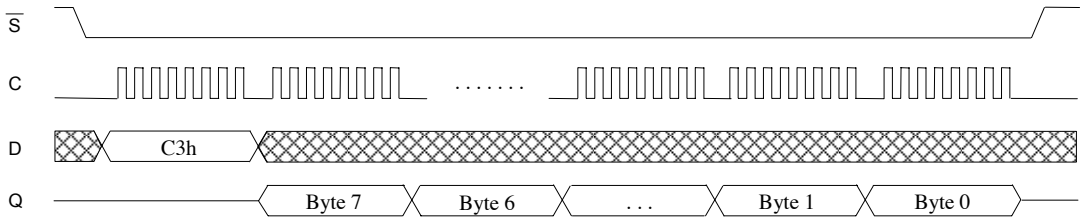

Figure 15. Read Serial Number

Endurance

The FM25V10 and FM25VN10 devices are capable of being accessed at least 10^{14} times, reads or writes. An F-RAM memory operates with a read and restore mechanism. Therefore, an endurance cycle is applied on a row basis for each access (read or write) to the memory array. The F-RAM architecture is based on an array of rows and columns. Rows are defined by A16-A3 and column addresses by A2-A0. See Block Diagram (pg 2) which shows the array as 16K rows of 64-bits each. The entire row is internally accessed once whether a single byte or all eight bytes are read or written. Each byte in the row is counted only once in an endurance calculation. The table below shows endurance calculations for 64-byte repeating loop, which includes an op-code, a starting address, and a sequential 64-byte data stream. This causes each byte to experience one endurance cycle through the loop. F-RAM read and write endurance is virtually unlimited even at 40MHz clock rate.

Table 7. Time to Reach 100 Trillion Cycles for Repeating 64-byte Loop

SCK Freq (MHz)	Endurance Cycles/sec.	Endurance Cycles/year	Years to Reach 10^{14} Cycles
40	73,520	2.32×10^{12}	43.2
20	36,760	1.16×10^{12}	86.4
10	18,380	5.79×10^{11}	172.7
5	9,190	2.90×10^{11}	345.4

Electrical Specifications

Absolute Maximum Ratings

Symbol	Description	Ratings
V_{DD}	Power Supply Voltage with respect to V_{SS}	-1.0V to +4.5V
V_{IN}	Voltage on any pin with respect to V_{SS}	-1.0V to +4.5V and $V_{IN} < V_{DD}+1.0V$
T_{STG}	Storage Temperature	-55°C to + 125°C
T_{LEAD}	Lead Temperature (Soldering, 10 seconds)	300° C
V_{ESD}	Electrostatic Discharge Voltage - Human Body Model (JEDEC Std JESD22-A114-B) - Charged Device Model (JEDEC Std JESD22-C101-A) - Machine Model (JEDEC Std JESD22-A115-A)	 TBD TBD TBD
	Package Moisture Sensitivity Level	MSL-1

Stresses above those listed under Absolute Maximum Ratings may cause permanent damage to the device. This is a stress rating only, and the functional operation of the device at these or any other conditions above those listed in the operational section of this specification is not implied. Exposure to absolute maximum ratings conditions for extended periods may affect device reliability.

DC Operating Conditions (T_A = -40°C to + 85°C, V_{DD} = 2.0V to 3.6V unless otherwise specified)

Symbol	Parameter	Min	Typ	Max	Units	Notes
V_{DD}	Power Supply Voltage	2.0	3.3	3.6	V	
I_{DD}	Power Supply Operating Current @ C = 1 MHz @ C = 40 MHz		 - 1.5	 0.3 3.0	 mA mA	1
I_{SB}	Standby Current		90	150	µA	2
I_{ZZ}	Sleep Mode Current		5	8	µA	3
I_{LI}	Input Leakage Current	-		±1	µA	4
I_{LO}	Output Leakage Current	-		±1	µA	4
V_{IH}	Input High Voltage	0.7 V_{DD}		V_{DD} + 0.3	V	
V_{IL}	Input Low Voltage	-0.3		0.3 V_{DD}	V	
V_{OH1}	Output High Voltage (I_{OH} = -1 mA, V_{DD}=2.7V)	2.4		-	V	
V_{OH2}	Output High Voltage (I_{OH} = -100 µA)	V_{DD}-0.2		-	V	
V_{OL1}	Output Low Voltage (I_{OL} = 2 mA, V_{DD}=2.7V)	-		0.4	V	
V_{OL2}	Output Low Voltage (I_{OL} = 150 µA)	-		0.2	V	
R_{IN}	Input Resistance (/HOLD pin) For $V_{IN} = V_{IH}$ (min) For $V_{IN} = V_{IL}$ (max)	 40 1			 KΩ MΩ	5

Notes

1. C toggling between V_{DD}-0.2V and V_{SS}, other inputs V_{SS} or V_{DD}-0.2V.
2. /S=V_{DD}. All inputs V_{SS} or V_{DD}.
3. In Sleep mode and /S=V_{DD}. All inputs V_{SS} or V_{DD}.
4. $V_{SS} \le V_{IN} \le V_{DD}$ and $V_{SS} \le V_{OUT} \le V_{DD}$.
5. The input pull-up circuit is stronger (> 40KΩ) when the input voltage is above V_{IH} and weak (> 1MΩ) when the input voltage is below V_{IL}.

Data Retention (T_A = -40°C to + 85°C)

Parameter	Min	Max	Units	Notes
Data Retention	10	-	Years	

AC Parameters (T_A = -40°C to + 85°C, C_L = 30pF, unless otherwise specified)

Symbol	Parameter	V_{DD} 2.0 to 2.7V		V_{DD} 2.7 to 3.6V		Units	Notes
		Min	Max	Min	Max		
f_{CK}	C Clock Frequency	0	25	0	40	MHz	
t_{CH}	Clock High Time	20		11		ns	1
t_{CL}	Clock Low Time	20		11		ns	1
t_{CSU}	Chip Select Setup	12		10		ns	
t_{CSH}	Chip Select Hold	12		10		ns	
t_{OD}	Output Disable Time		20		12	ns	2
t_{ODV}	Output Data Valid Time		18		9		
t_{OH}	Output Hold Time	0		0		ns	
t_D	Deselect Time	60		40		ns	
t_R	Data In Rise Time		50		50	ns	2,3
t_F	Data In Fall Time		50		50	ns	2,3
t_{SU}	Data Setup Time	8		5		ns	
t_H	Data Hold Time	8		5		ns	
t_{HS}	/HOLD Setup Time	12		10		ns	
t_{HH}	/HOLD Hold Time	12		10		ns	
t_{HZ}	/HOLD Low to Hi-Z		25		20	ns	2
t_{LZ}	/HOLD High to Data Active		25		20	ns	2

Notes

1. $t_{CH} + t_{CL} = 1/f_{CK}$.
2. This parameter is characterized but not 100% tested.
3. Rise and fall times measured between 10% and 90% of waveform.

Capacitance (T_A = 25° C, f=1.0 MHz, V_{DD} = 3.3V)

Symbol	Parameter	Min	Max	Units	Notes
C_O	Output Capacitance (Q)	-	8	pF	1
C_I	Input Capacitance	-	6	pF	1

Notes

1. This parameter is characterized and not 100% tested.

AC Test Conditions

Input Pulse Levels	10% and 90% of V_{DD}
Input rise and fall times	3 ns
Input and output timing levels	0.5 V_{DD}
Output Load Capacitance	30 pF

Serial Data Bus Timing

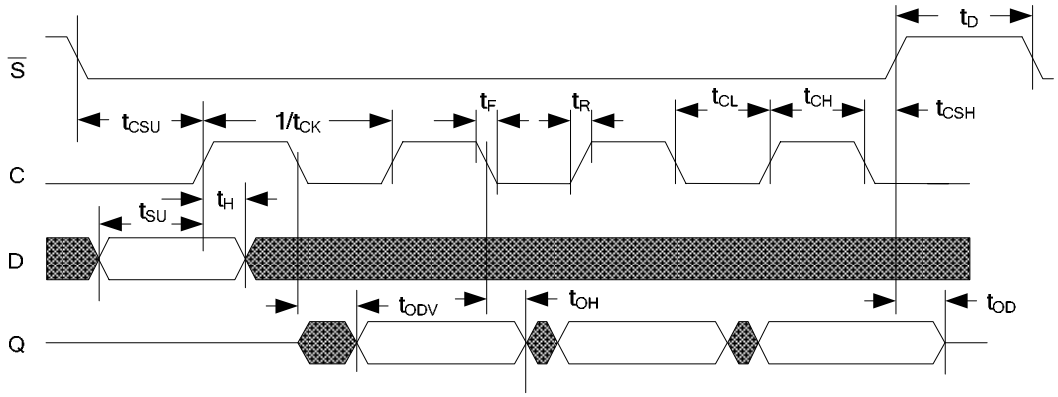

/HOLD Timing

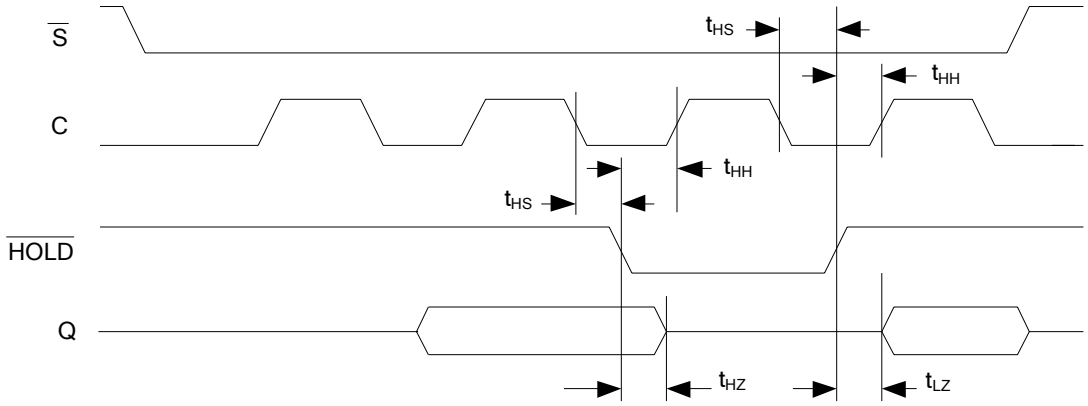

Power Cycle Timing

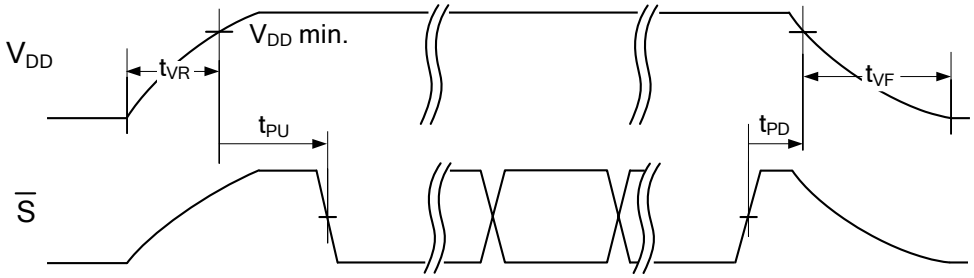

Power Cycle & Sleep Timing (T_A = -40° C to + 85° C, V_{DD} = 2.0V to 3.6V, unless otherwise specified)

Symbol	Parameter	Min	Max	Units	Notes
t_{VR}	V_{DD} Rise Time	50	-	µs/V	1,2
t_{VF}	V_{DD} Fall Time	100	-	µs/V	1,2
t_{PU}	Power Up (V_{DD} min) to First Access (/S low)	250	-	µs	
t_{PD}	Last Access (/S high) to Power Down (V_{DD} min)	0	-	µs	
t_{REC}	Recovery Time from Sleep Mode	-	400	µs	

Notes

1. This parameter is characterized and not 100% tested.
2. Slope measured at any point on V_{DD} waveform.

Mechanical Drawing

8-pin SOIC (JEDEC MS-012 variation AA)

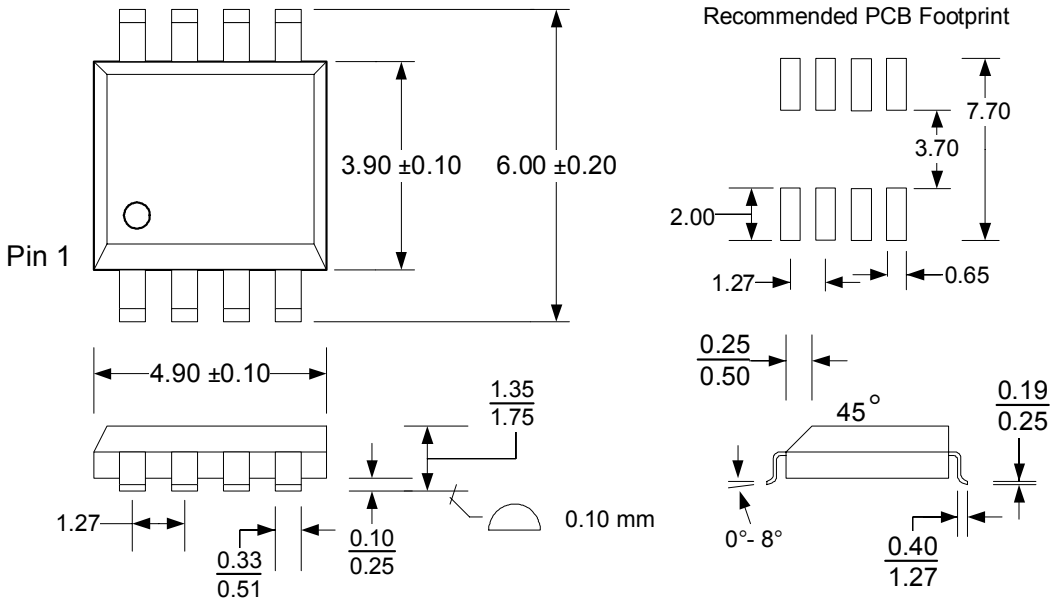

Refer to JEDEC MS-012 for complete dimensions and notes.
All dimensions in millimeters.

SOIC Package Marking Scheme

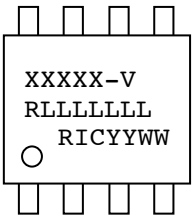

Legend:
XXXXX= part number, V=V_{TP} (1=3.09V, 2=2.94V, …)
R=rev code, LLLLLLL= lot code
RIC=Ramtron Int'l Corp, YY=year, WW=work week

Example: FM25V10, "Green"/RoHS SOIC package,
Rev. A, Lot 6340282A, Year 2008, Work Week 24

Without S/N feature	With S/N feature
25V10	25VN10
A6340282A	A6340282A
RIC0824	RIC0824

Revision History

Revision	Date	Summary
1.0	8/29/2008	Initial release.

Ordering Information

Part Number	Features	Operating Voltage	Reset Threshold	Package
FM25V10-G	Device ID	2.0-3.6V	-	8-pin “Green”/RoHS SOIC
FM25VN10-G	Device ID, S/N	2.0-3.6V	-	8-pin “Green”/RoHS SOIC