Fonik Clock Divider

– 2N3904 Version

Circuit design (C)2009 by Matthias Herrmann

http://electro-music.com/forum/viewtopic.php?t=31319
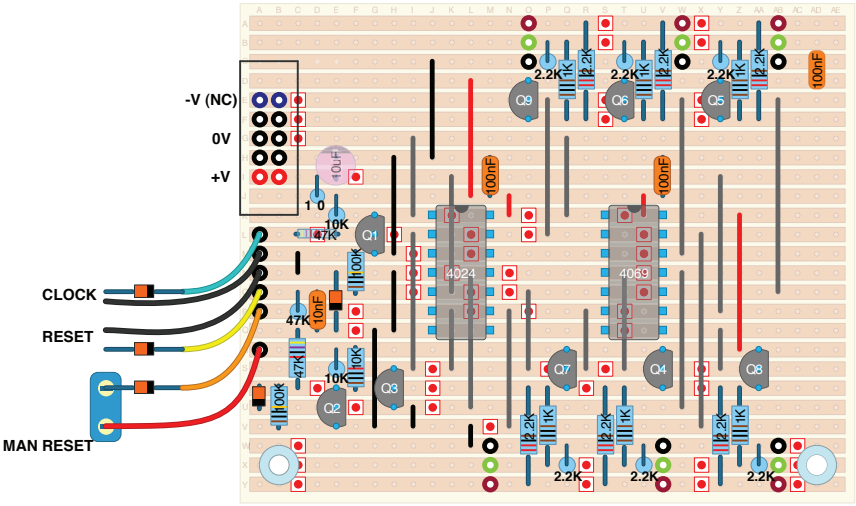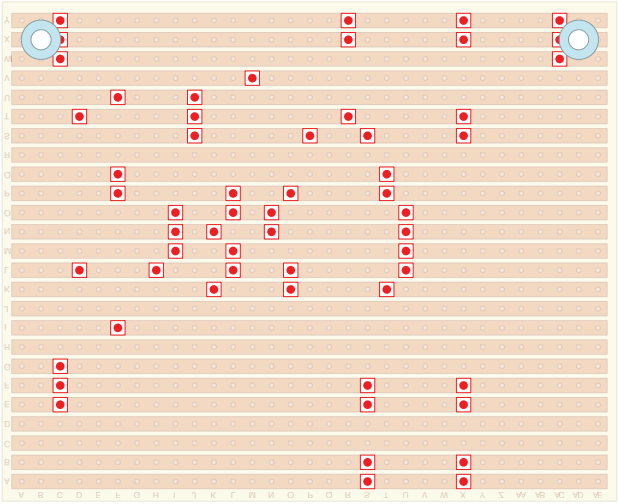
Stripboard layout by roglok