SYNTHAX-100

PLANS

ELECTRAX INTRODUCES ********** THE SYNTHAX-100 **********

The first versatile synthesizer designed for the standard electric guitar (no modification required). Create all those sounds you are familiar with, plus some new incredible effects.

Here is a description of the circuits you will find when you order plans to build the SYNTHAX-100:

INPUT PROCESSOR - Takes output from your guitar and generates trigger, square wave, and natural envelope signals.

BASS GENERATOR - Synthesizes the deep sounds of string bass and contrabass.

LESLIE SIMULATOR - Play your guitar thru a "rotating speaker" sound synthesizer.

HARMONIC GENERATOR - This phase-lock-loop pitch follower will generate 3 higher octaves and a sub-octave for every note that you play. Create siren nd vibrato sounds. It also contains a sample and hold which will allow you to "hold" any note after you stop playing it. You can also mix the harmonics to create new sounds.

VOLTAGE-CONTROLLED FILTER - With it you can vary the tone color of the natural, square, harmonics, etc. It has low-pass, band-pass, and high-pass outputs. It can be voltage-controlled from 20HZ to 20KHZ.

CONTROL OSCILLATOR - Used for frequency modulation of the VCF and VCA. It has four ranges from sub-audio to audio frequencies.

ENVELOPE GENERATOR - Vary the attack and decay of natural and synthesized sounds. Create percussive or bowed sounds. Used to control the VCA and VCF.

VOLTAGE-CONTROLLED AMPLIFIER - A linear amplifier which is controlled by the envelope generator or control oscillator.

OUTPUT MIXER - Mix the effects you want or cancel them to play the natural guitar sounds. Effects can be switched in and out by means of foot-switch controls. Its output is connected you your guitar amplifier.

POWER SUPPLY - Contains three IC regulator +5VDC, +12VDC, -12VDC to power the modules.

Complete parts list and construction ideas are included in the plans to build this professional synthesizer. Don't wait! Use the coupon below to order the SYNTHAX-100 plans and start creating new sounds with your guitar.

MAIL TO: ELECTRAX
P. O. BOX 149
TARZANA, CALIF. 91356

Rush me plans to build the SYNTHAX-100 guitar synthesizer. Enclosed is ~~6.00~~ FOREIGN 7.00

NAME _____ Check __

ADDRESS _____ Money Order __

CITY _____ STATE _____ ZIP _____

ELECTRAX introduces the SYNTHAX-100. The first versatile synthesizer designed for the standard electric guitar with the musician and electronic experimenter in mind.

The SYNTHAX-100 will allow you to create those quitar effects you are familiar with, plus a variety of new sounds. Rather than connect a number of accesories to your guitar, such as wah, fuzz, octave, pedals, plug a single electronic instrument between your ax and power amp and create the sounds you want.

The SYNTHAX-100 has all the features of a keyboard synthesizer plus a special guitar interface. It contains the following circuits:

1. GUITAR SIGNAL PROCESSOR
2. FUZZ GENERATOR
3. BASS GENERATOR
4. "LESLIE" SIMULATOR
5. HARMONIC GENERATOR/NOTE STORAGE
6. VOLTAGE-CONTROLLED FILTER
7. ATTACK-RELEASE ENVELOPE GENERATOR
8. CONTROL OSCILLATOR
9. VOLTAGE-CONTROLLED AMPLIFIER
10. FOOT SWITCH CONTROLLED OUTPUT MIXER

The SYNTHAX-100 should be built in the same form as a good commercial synthesizer. Each function is built on a module and all modules are internally connected eliminating patch cord mess. A series of modular panel sections are mounted on a sloping cabinet (Fig. 3) to ease adjustment of controls. The cabinet should be made of plywood or other suitable material. Panels should be aluminum and drilled, punched, and finished prior to assembly. Use transfer lettering to identify controls (Fig.2). Spray panels with protective finish such as clear epoxy. Each panel is 8" x 4½" and contains potentiometers, switches, and edge connector for plugboard (Fig. 1). The plugboard is a Vector 3797-3, which has 15 dual contacts, .100 "hole patterns", etch grid with power busses and 3 hole pads. Board size is 4.5" x 2.7". It will lend a very professional look to the project and aid you in wiring and trouble-shooting (cost @ $3.70 ea.). A less expensive alternate approach is to build the modules using Vectorboard (prepunched, non-etched) cut to size and T42-1 micro-klip terminals for component mounting. Cost factors: Vectorboard 169P44-06ZEP, 4.5" x 17" x 1/16" @ $3.83, T-42-1 @ $11.70 per 1000, P149 insertion tool @ $1.49. All prices quoted are from Vector Short Form Catalog No. 23. Vectorboard modules can be mounted to panels using "L" brackets.

ll the electronics is contained in 7 boards. The power supply is built on a separate board, and mounted to the rear panel along with the power switch, fuse, and AC cord. The rear panel also contains Molex connectors for the external foot-switch module and optional pedal control.

The foot-switch module houses seven single-pole single-throw locking switches (heavy duty foot switches). A chassis box (Bud type) no higher than 2" with closed bottom should be used.

An optional pedal to control both the VCA and VCF can be used. Rather than constructing one it is easier to purchase a low price wah pedal (Penney's Catalog R857-4444A @ $19.95) or perhaps you can get hold of a used or "broken" pedal. Also, you may try to contact a pedal manufacturer to purchase one without the electronics.

In regards to wiring the PC boards, good wiring practices should be followed. Since most of the circuitry is made up of op-amps, keep summing junctions close to the IC's, inputs away from outputs, and wires as short as possible. Use IC sockets to aid in trouble-shooting and repair. All signals of the same name should be connected together. All components surrounded by heavy lines, as shown on schematics, are panel mounted. All potentiometers with screw symbol adjacent are screwdriver adjusted PC-mount trimmers. Circle letters or numbers next to signal indicate input or output pins of PC board. Inter-module wiring should be neat (Fig. 1). Allow 4" long service loop to facilitate front panel removal of modules for check-out or repair. Harness wires together with tape, cable ties, or lace cord. Use shielded cable for interconnection if possible. The guitar input connection should definitely be shielded. It is very inportant to eliminate hum and crosstalk between signals.

To keep the cost of the project down buy parts from local or mail order surplus houses. Great bargains can be found on the back pages of Radio Electronics and Popular Electronics magazines.

The following is a circuit description of each individual module.

POWER SUPPLY (schematic sheet #3) - This circuit is made up of three IC regulators and provides +12, +5, -12 VDC to the modules. These regulators ave fixed output voltage, internal peak current limiting, and thermal shutdown. The LM320T-12 and LM340T-12 can supply up to 1 amp. The LM309H can supply a maximum of 200 MA. The total current load of the SYNTHAX-100 is +5V-30MA, +12V-70MA, -12V-60MA. There is no heat sink required. VR1, VR2, and VR3 should be mounted upright. Use a 24VCT-.5 amp transformer. The unregulated voltages (+16, -16VDC) are used to power the two LED's used on the front panel. Check the output of each regulator for the proper voltage with less than 100MV ripple.

INPUT PROCESSOR (module 1-A) - Z-1 is a Hi-Z non-inverting pre-amp stage with variable gain. Adjust R1 for a 2 volt peak to peak signal with your guitar set for maximum volume out. Z1-7 is a second gain stage with gain of 33. Z2-1 is a low pass active filter designed to filter out the harmonic content of the vibrating string waveform. One of the main problems in interfacing with a guitar is the large amount of second harmonic present in the low strings. A filter can be designed to filter it out completely; however, note that the second harmonic of E (82,4HZ) is exactly E (164.8) or one octave higher. Thus to allow a frequency range of 80 to 660HZ (3 octave guitar range) and sufficient signal amplitude to work with, a "compromise filter" must be used. If you pluck the low E string and monitor Z1-7 you will note that the second harmonic "creeps" up to equal amplitude as the fundamental. Z2-7 is schmitt-trigger comparator which squares the filtered sinewave. The square wave will remain clean for the most part of note duration. The low E will change to twice the frequency at the decay of the vibrating string. Note that R9 goes into the positive input of op-amp. The output of this comparator is SQR1. SQRW is an attenuated 2V PK/PK signal. R13, CR2, C3, R22, and R23 make up a DC voltage which follows the envelope and generates a "note-detected" or gate signal. The leading negative edge of this signal is used to trigger the AR envelope (TRIG.). R14 can be set to detect the start of every note or only that of strong level notes or chords. Z3-7 is a voltage follower (natural envelope). Q1 is an inverter which generates the store control signal for the harmonic generator. Q2 is the trigger LED driver. This LED should momentarily light to indicate a triggered condition.

FUZZ GENERATOR (module 1-B) - Z21-7 is a high gain diode limited stage which "soft-clips" the natural input waveform. This gives a good distorted sound. R60 sets amount of distortion. The output of the fuzz generator is approximately constant in amplitude (2V PK/PK).

BASS GENERATOR (module 2-A) - The natural input waveform is filtered by Z4-1, an active low-pass filter designed for the lower half of the guitar range. This will allow you to let the low strings vibrate for a long duration without second harmonic problems. Z4-7 is a schmitt-trigger comparator which gives a clean square wave. Q4 is collector "ored" with Q3 which is a TTL converter for SQR1. Z6 is a dual D type flip-flop (7474) which divides Q4 or Q3 signals by two or four. S5 (A & B) select which signal is fed to the dividers and which output goes to the bass filter. S5-A grounds Q3 or Q4 base, driving it to cut-off state. The envelope DC voltages at Z3-7 and Z5-1 thru CR6 and CR7 limit the output of the flip-flops to the amplitude of the natural envelopes. R36, 37 and C9,C10 form a passive low pass filter which converts the square wave to a sinuosoidal. R36 and R37 can be varied to change the sound of the bass. The values shown on the schematic will give a deep bass. S5 in th ¼ position will result in normal bass sounds when playing the upper half of the guitar range, and contrabass when playing the lower half. With S5 in the ½ position you will get normal bass when playing with the lower half of the guitar range only; no bass sound will be heard from the upper half of the range.

"LESLIE" SIMULATOR (module 2-B) - This module gives that popular rotating speaker sound to your guitar. Z10-1 is an active bandpass filter whose center frequency is varied by the changing resistance of FET Q6. The lower the resistance the higher the frequency travel. Z11-1 and Z11-7 form a low frequency oscillator whose speed is controlled by R67. Z10-7 is a summing amplifier which controls the resistance of Q6. R72 sets the biasing (tone) and R70 the amount of modulation (triangular wave). Set all three of these pots to obtain the desired sound.

HARMONIC GENERATOR (module 3) - This is a unique circuit which gives you three upper octaves for every note, plus it allows you to hold a note on command "indefinitely". Also by adjusting the response of the circuit you can obtain sounds varying from sirens to warbling birds: What is this magic circuit? A track and hold phase-lock loop. The heart of the circuit is the CD4046AE, a CMOS PLL. This PLL will track over the entire guitar frequency range. A phase-lock loop IC contains a phase comparator, VCO, and internal +5V zener regulator. In the normal PLL function the phase of the input frequency is compared with that of the VCO. An error voltage is created (pin 13) and connected through a low pass filter to the VCO in order to correct for the phase difference. The PLL will "lock" when the phase difference is 0 degrees. At that point the frequency of the VCO will match that of the input. When the square wave of the VCO is connected to a binary divider (in this case a division by 8) the PLL will "lock" when the phase difference between the input (Ø1) and the binary divider (Ø2) is 0 degrees. Thus the output of the VCO will be at 8 times the input frequency. All intermediate Q outputs will be even multiples of the input. A 7493 IC is used as a divide by 8 and 2. The latter results in ½ the input frequency. The PLL will capture and track the input when Q5 FET is on, thus Z7-13 is connected to Z7-9. S1 should be in manual position, S2 off. The setting of S4 will determine the response time of the system. In the SLOW position the PLL will take seconds to capture the input from an idle condition. Once "locked" it will slowly glide from one note to the next. R45 should be adjusted for the desired response. Maximum

HARMONIC GENERATOR (cont'd.)

resistance will result in slow vibrato sound, minimum resistance will sound like ring modulation. Adjusted midway the PLL will capture the frequency without over or under damping response. In the MEDIUM position you can vary R46 from medium vibrato to modulation effects. A mid position will give you a slight portamento between notes. FAST will give you "warbling bird" vibrato to ring modulator sounds. A mid position will have no glide but a rapid change from note to note. Once the PLL is adjusted for "proper" response, vibrato, or large frequency, variations can be obtained with the frequency modulation switch on. R38 controls amount of modulation. Square or triangle waveforms are available from the control oscillator. With S1 (module 1-A) in the MANUAL position the PLL will return to its lowest VCO frequency when idle. With S1 in the AUTO position each note will be automatically "stored" when the guitar note decays below the SENSITIVITY adjusted point. When STORE is a -12V the FET will be open (very high resistance) and the last voltage to appear at Z7-13 will be "held" by the selected capacitor. C16 and C17 should be polycarbonate type to minimize the droop or discharge and resulting "detuned" frequency. C15 should be a tantalum low leakage capacitor. While in the AUTO or MANUAL any individual note can be held in memory by means of a foot actuated switch S2, while other natural guitar notes are played along with it. R48 thru R52 allow for any mix of octaves. (See RCA CMOS Data Book for detail description of the CD4046AE.)

VOLTAGE-CONTROLLED FILTER (module 4) - Z17, Z18, and Z19 make up a linear voltage controlled filter with simultaneous low pass, band pass and high pass outputs and variable Q. The center frequency can be varied by means of a pot and by modulating waveforms. It has a wide frequency range (approx. 20HZ to 20KHZ). The Q (resonance) can be varied from low level to high peaked (oscillating) level by means of a pot. Again, the CA3080E OTA is used as a "variable resistor" controlled by current flowing into its control input. Two OTA's are used along with an inverting summing amplifier to form a bi-quad or state-variable filter. Z17-7 is the summing control op amp. It has four possible inputs: manual center, up or down envelope control, frequency modulation, and optional pedal control. Four independent signal controls allow inputs from NATURAL guitar output, SQUARE waveform, HARMONIC mixer, and $\frac{1}{4}$ or $\frac{1}{2}$ from the BASS generator. Note -10.6V voltage source (also connected to VCA's 3080E) required for proper range of control from the 1458 op amp which will only swing to approximately 11 volts. If the OTA's, pin 4, were connected to -12V the current flowing into pin 5 could not be cut off sufficiently, thus limiting the low end of the frequency range.

ENVELOPE GENERATOR (module 5-A) - This circuit is made up of a one shot (555) Z15 which is triggered at the start of each note or chord. When Z15-2 goes low, Z15-3 goes to +12V charging C32 thru R100, R102, and CR10. When the voltage at C32 reaches the threshold of the 555 (+8V), Z15-3 goes low reverse biasing CR10. Z15-7 which was "floating" now goes to ground discharging C32 thru R101 and R102. Thus we have two independent rates of charge and discharge. R102 controls the attack and R103 the release or decay of the envelope. Z16-1 is a follower and Z16-7 is an inverter. Proper adjustment of the ATTACK and RELEASE controls will allow you to recreate envelopes peculiar to different types of musical instruments. Short attack and variable decay simulate piano and plucked sounds. Slow attack variable decay simulates wind instruments. Slow attack and fast release simulates "reversed" tape sounds. The output of this module controls the VCA and VCF.

CONTROL OSCILLATOR (module 5-B) - Z14-1 and Z14-7 form a variable frequency oscillator. Z14-7 is an integrator and Z14-1 a schmitt/trigger comparator. There are two output waveforms, SQUARE and TRIANGLE, used to modulate the VCA, VCF, and harmonic generator. There are four frequency ranges:

1.	.07 -.7HZ	ultra slow
2.	.7 - 7HZ	vibrato speed
3.	7 -70HZ	audio frequency
4.	70 -700HZ	audio frequency

VOLTAGE-CONTROLLED AMPLIFIER (module 6) - The heart of this circuit is an OTA (operational transconductance amplifier) Z13, whose gain is controlled by the current flowing into pin 5. Z12-1 is the summing control amplifier. R75 sets the proper offset voltage (-10.6V at Z12-1) to bias-off the OTA for no-gain initial condition. R80 and R81 control the modulating waveforms of the VCA. Set R81 for no AR envelope and R80 for full frequency modulation. Set control oscillator to square wave. Adjust R88 (OFFSET) for zero output from Z13-6. That is, the modulating carrier should not show up at the output of Z12-7. R81 should be set to maximum level and R82 to minimum for normal AR envelope control. R80 will allow frequency modulation that can vary from tremolo to ring modulator type at audio frequencies. R83 controls the level of natural guitar sounds thru the VCA. R85 controls the level of VCF input. The CA3080E OTA makes an extremely linear voltage controlled amplifier. (See RCA Linear Handbook for CA3080E details.) To use the optional pedal control set R80, R81, R83, R85 controls to zero voltage. This will allow full volume control from pedal.

OUTPUT MIXER (module 7) - Z20-7 is a summing amplifier with inputs controlled by foot operated electronic switches. Two CMOS 4016 quad analog gates are used to connect the NATURAL, BASS, "LESLIE", FUZZ, VCA, and VCF outputs to the mixer. The analog gates are switched on or off by the status of A thru G control lines. EFFECT control lines originate at the FOOT-SWITCH module. When the CANCEL switch is open all effects are switched off and only the natural guitar sound is amplified. Z20-2 pulls up to +12V and Z20-1 to -11V. This switches off B thru G control gates. When the CANCEL switch is closed, Z20-2 is at -5V, Z20-1 is at +11V, thus enabling control lines B thru G to be turned on (+11) or off (-5) as required. R139 thru R144 set the levels of the effects to be mixed. When in the CANCEL mode R145 LEVEL should be set for zero signal loss thru the synthesizer. R157 is the master volume control. Though not shown in the foot switch control schematic, LED's can be used to indicate which effect is on. Double-pole double-throw switches must be used to isolate the LED's from the control lines.

To properly use the SYNTHAX-100, become familiar with each module function and its controls. As with any synthesizer it takes time to master the controls. You will have hours of enjoyment listening to the sounds you can create with your guitar and the SYNTHAX-100. Other instruments can also be used with the SYNTHAX-100 such as electric piano and organ. Also you may plug a microphone into the guitar input and listen to some very interesting sounds. The harmonic generator will "sing" along with you. However, human speech is made up of highly complex waveforms. Try placing the microphone next to your throat where the frequency is mainly fundamental and hum a melody, you will be amazed at the results.

Comments on the success of your project will be greatly appreciated.

PARTS LIST

Resistors ¼w 5%

100k - R3, 7, 13, 15, 18, 41, 53, 54, 55, 56, 65, 76, 77, 78, 82, 84, 86, 89, 91, 94, 98, 104, 105, 106, 110, 112, 114, 116, 117, 118, 121, 126, 129, 135, 136, 137, 146, 149, 150, 151, 152, 153, 154, 155, 158, 159, 160, 161, 162, 163, 165, 167, 168, 173
4.7k - R122,147.
10k - R4,200 17, 19, 20, 24, 29, 42, 58, 59, 62, 99, 125, 130, 131, 169 20
22k - R36, 37
1k - R9, 12, 21, 27, 43, 68, 97, 100, 101, 175,208,209,210,211
820k - R73
82K - R206
530k - R28
330k - R5, 10, 66, 71, 95
150k - R74
47k - R6, 30, 31, 108, 156
2,2k - R26, 33, 34, 35,201
5.6k - R8,2
27k - R25, 57
18k - R11
680k - R22, 23, 32
470K - R202
220k - R63, 92
20K - R204
2.2m - R39
1m - R40, 44, 69, 16
39K - R205
10 ohm - R61, 79, 93, 123, 124, 174
330 ohm- R87, 90
470 ohm- R119, 120, 127, 128

Resistors ¼w 1%

120ohm - R171
680ohm - R172

POTENTIOMETERS--LINEAR TAPER, PANEL MOUNT

100k - R14, 48, 49, 50, 51, 52, 38, 81, 83, 85, 132, 133, 134, 107, 109, 111, 113, 115, 166, 139, 140, 141, 142, 143, 144, 145
10k - R80, 96, 157, 170
1m - R45, 46, 47, 60, 102, 103

TRIMMERS, PC MOUNT

10k - R1, 67, 70, 72, 75, 88
500ohm - R64

CAPACITORS

.1mfd - C1, 4, 5, 6, 8, 9, 10, 14, 31, 27, 43
.01mfd - C2, 19, 20, 21, 26, 30
.22mfd - C3
.22(polycarbonate) - C17
1mfd - (polycarbonate) - C16
2.2mfd (tantalum) - C7
1mfd - 25V(tantalum) - C32, ~~44~~, 28, 37
10mfd - 25V(tantalum) - C15, 22, 23, 24, 25, 29, 33, 35, 39, 41, 42, 44
150pf - C34, 36
2000mfd - 25V (electrolytic) - C38, 40
5100 pf - C13

DIODES

1N4148 (1N914 equiv.) - CR1, 2, 3, 4, 5, 6, 7, 8, 9, 10, 11, 12, 13,
1N4001 - CR14, 15, 16, 17
LED (red, 20MA type) - LD1, 2
IN751 (5.1V ZENER) - CR18

IC'S

MC1458P (or equiv. dual op-amp) - Z1, 2, 3, 4, 5, 9, 10, 11, 12, 14, 16, 17, 20, 21, 23
CD4046AE (RCA CMOS PLL) - Z7
CA3080E (RCA OTA) - Z13, 18, 19
CD4016AE (RCA CMOS quad bilateral switch) - Z21, 22

NE555 (or equiv. timer) - Z15

SN7474 (TTL D-flip-flop) - Z6

SN7493 (TTL binary counter) - Z8

LM340T-12 (positive 12V regulator) - VR1

LM320T-12 (negative 12V regulator) - VR2

LM309H (positive 5V regulator) - VR3

TRANSISTORS

2N4123 (or equiv. NPN) - Q3, 4
2N4125 (or equiv. PNP) - Q1, 2
U1898E (or equiv. FET 2N5638, TIS74) - Q5, 6, 7

SWITCHES

SPST (foot-switch locking-type) - S2, 11, 12, 13, 14, 15, 16, 8, 10
SPDT (toggle or slide type) - S1, 3, 6, 7, 18
DPDT (toggle or slide type) - S5
ROTARY (1 deck, 3 position) -S4
ROTARY (1 deck, 4 position) -S7

MISCELLANEOUS HARDWARE

Vector plugboard #3797-3 (8 required)

Edge connector Vector #R630 (8 required)

Alternate choice : Vectorboard #169P44-06ZEP, 4.5" x 17" x 1/16"
T42-1 Micro-klip terminal (as required)

IC SOCKET, 8 pin (17 required)

14 Pin IC SOCKET (3 required)

16 Pin IC SOCKET (1 required)

24.6 volt/.5A center tap transformer

Fuse receptacle, ½ amp fuse

AC cord with plug (six foot)

Wood cabinet built as required.

Aluminum panels as required.

Foot switch aluminum box.

Wire as needed.

Misc. screws & bolts.

Phono jacks 2 required

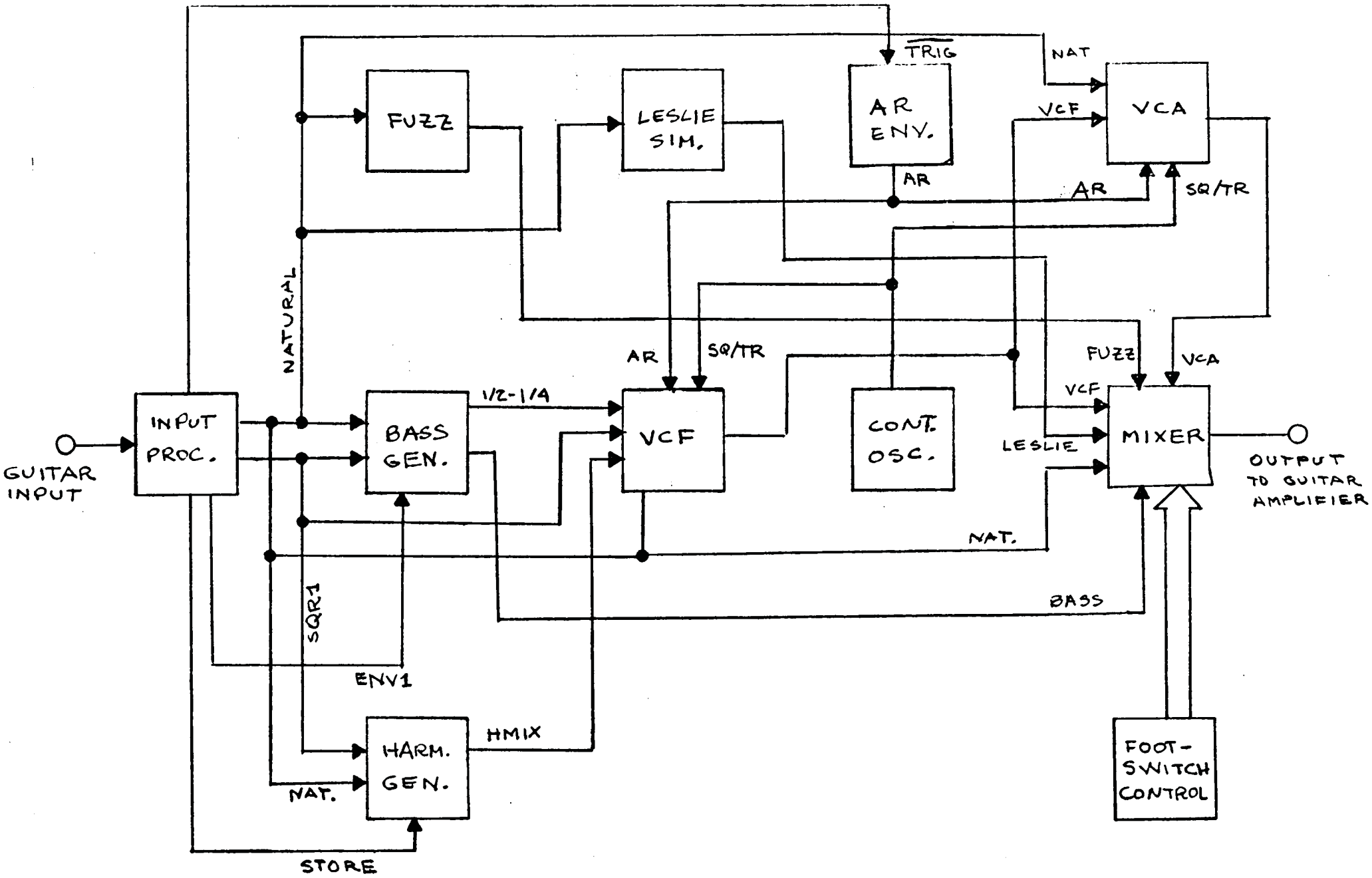

BLOCK DIAGRAM

FIG. 5

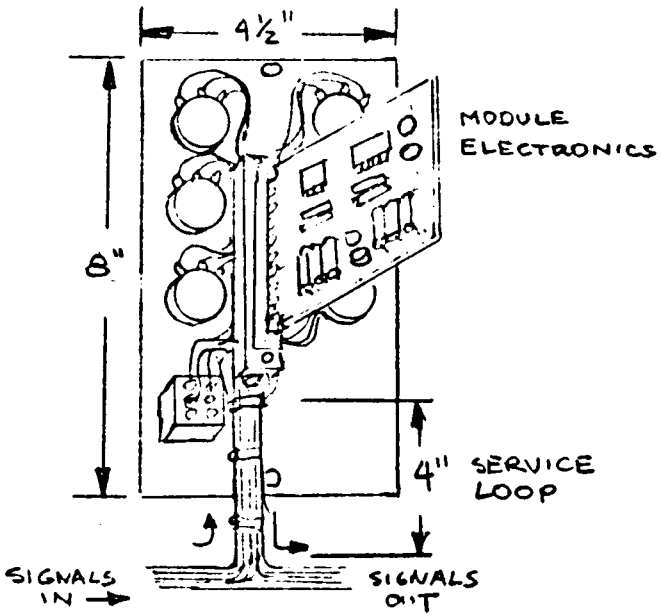

FIG 1

TYPICAL MODULE WIRING

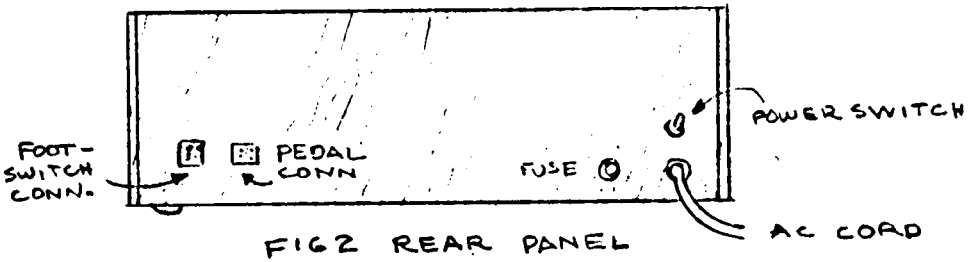

FIG 2 REAR PANEL

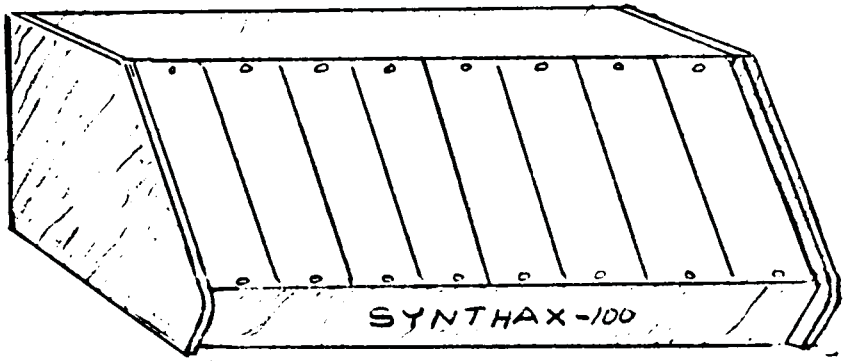

FIG 3 CABINET

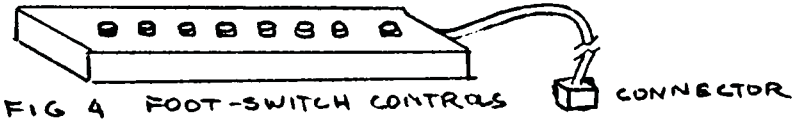

FIG 4 FOOT-SWITCH CONTROLS

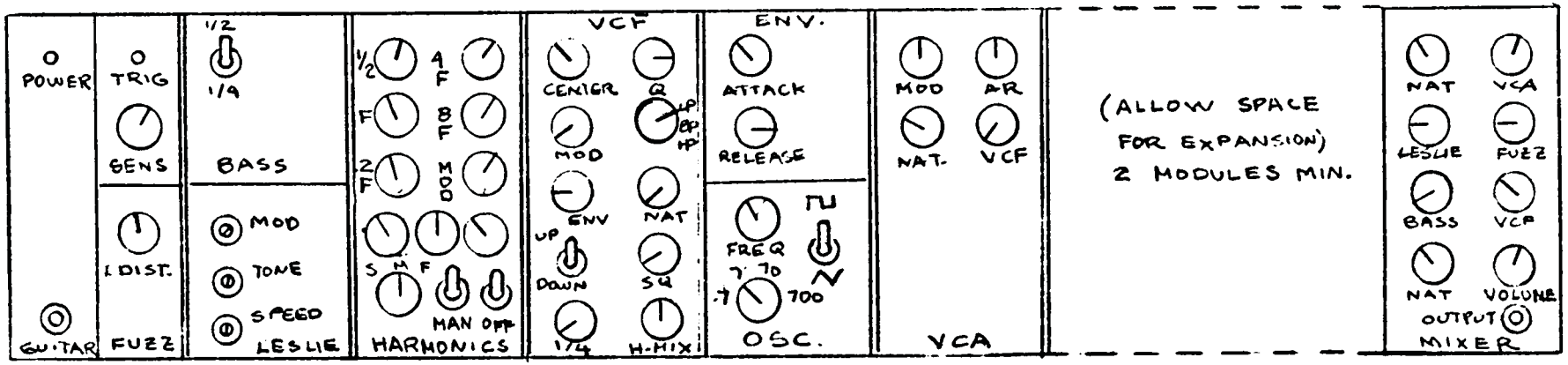

FIG 2 FRONT PANEL LAYOUT

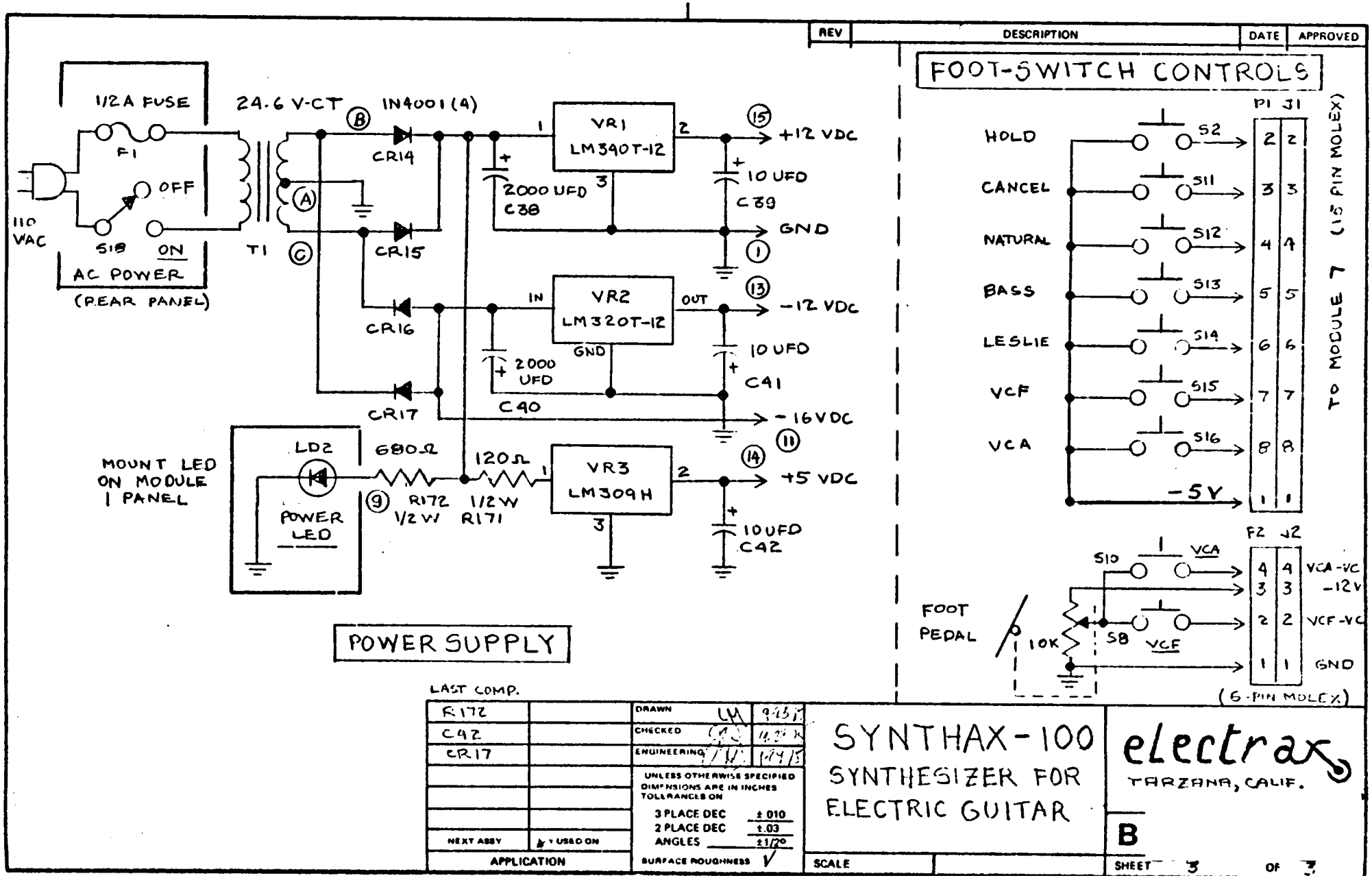

REV
DESCRIPTION
DATE
APPROVED
1/2A FUSE
F1
OFF
S18
ON
110 VAC
AC POWER
(REAR PANEL)
24.6 V-CT
T1
1N4001 (4)
CR14
CR15
CR16
CR17
VR1
LM340T-12
2000 UFD
C38
10 UFD
C39
+12 VDC
GND
VR2
LM320T-12
IN
OUT
GND
2000 UFD
C40
10 UFD
C41
-12 VDC
-16VDC
MOUNT LED ON MODULE 1 PANEL
LD2
POWER LED
680Ω
R172
1/2 W
120Ω
1/2 W
R171
VR3
LM309H
+5 VDC
10UFD
C42
POWER SUPPLY
FOOT-SWITCH CONTROLS
P1 J1
HOLD
CANCEL
NATURAL
BASS
LESLIE
VCF
VCA
S2
S11
S12
S13
S14
S15
S16
-5V
TO MODULE 7 (15 PIN MOLEX)
P2 J2
S10
VCA
S8
VCF
FOOT PEDAL
10K
VCA-VC
-12V
VCF-VC
GND
(6-PIN MOLEX)
LAST COMP.
R172
C42
CR17
NEXT ASSY
USED ON
APPLICATION
DRAWN
CHECKED
ENGINEERING
UNLESS OTHERWISE SPECIFIED DIMENSIONS ARE IN INCHES TOLERANCES ON
3 PLACE DEC ±.010
2 PLACE DEC ±.03
ANGLES ±1/2°
SURFACE ROUGHNESS
SYNTHAX-100
SYNTHESIZER FOR ELECTRIC GUITAR
electrax
TARZANA, CALIF.
B
SCALE
SHEET 3 OF 3

INPUT PROCESSOR

MODULE 1-A

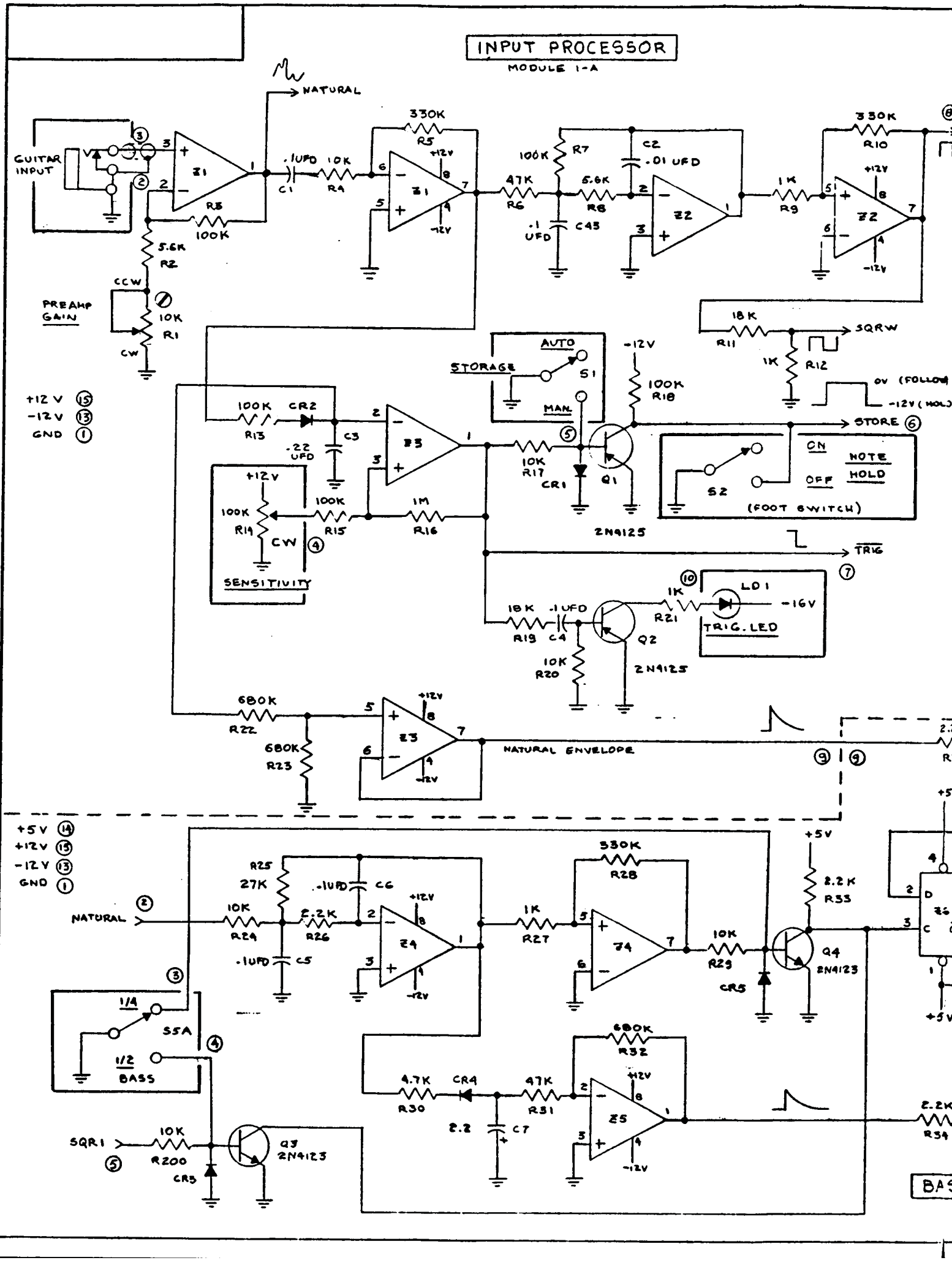

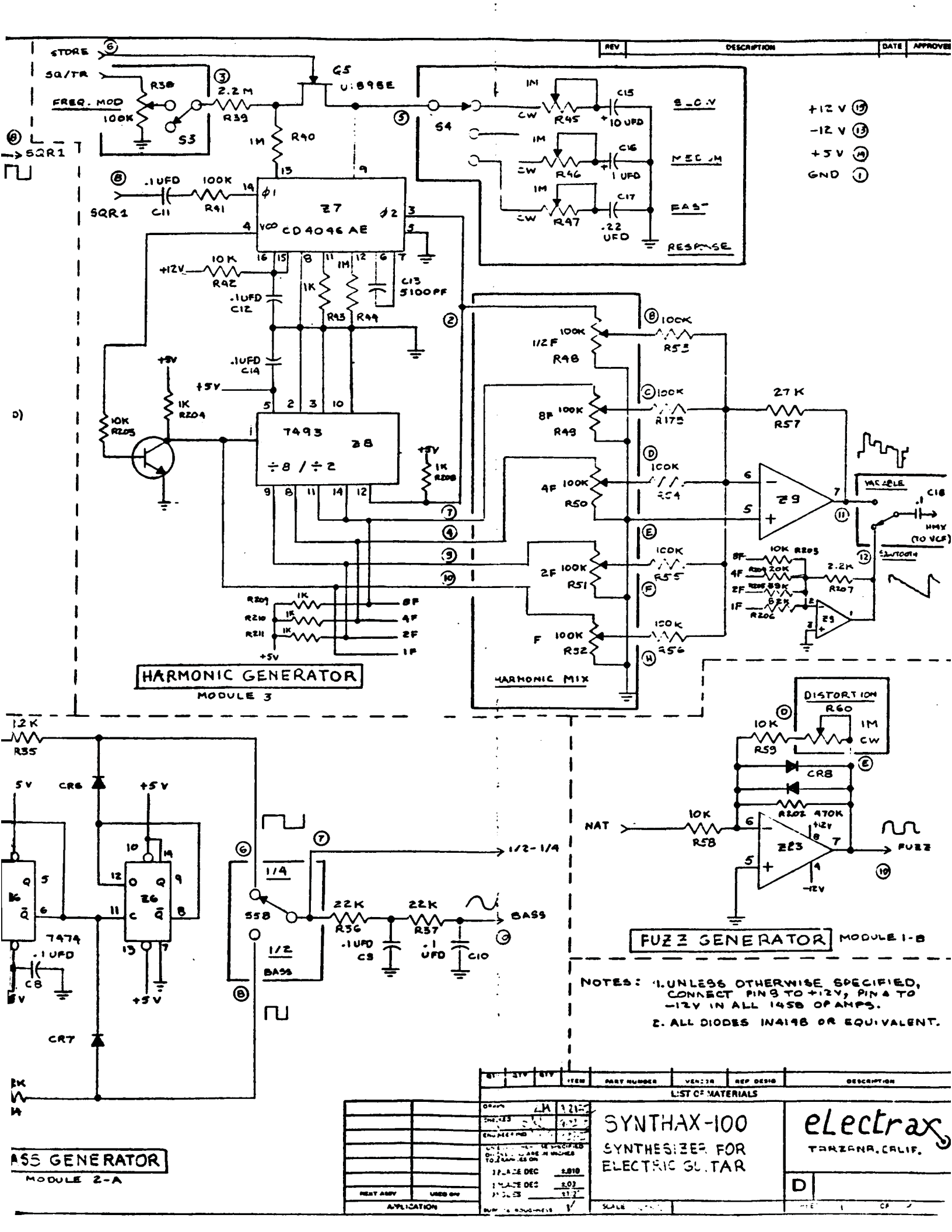

REV
DESCRIPTION
DATE
APPROVED
STORE
SQ/TR
FREQ. MOD
100K
R38
S3
2.2 M
R39
G5
U1898E
1M
R40
S4
SLOW
MEDIUM
FAST
RESPONSE
R45
R46
R47
C15
C16
C17
10 UFD
1 UFD
.22 UFD
+12 V
-12 V
+5 V
GND
SQR1
C11
.1UFD
100K
R41
Z7
CD4046 AE
+12V
10K
R42
.1UFD
C12
1K
R43
R44
C13
5100PF
.1UFD
C14
+5V
1K
R204
10K
R205
7493
Z8
÷8 / ÷2
1K
R208
R209
R210
R211
8F
4F
2F
1F
HARMONIC GENERATOR
MODULE 3
1/2F
R48
R53
8F
R49
R175
4F
R50
R54
2F
R51
R55
F
R52
R56
HARMONIC MIX
27K
R57
Z9
VARIABLE
C18
HMX
(TO VCF)
SAWTOOTH
R203
R204
R205
R206
R207
2.2K
DISTORTION
R60
R59
CR8
R202
470K
NAT
R58
Z23
FUZZ
FUZZ GENERATOR
MODULE 1-B
12K
R35
CR6
CR7
Z6
7474
C8
1/4
1/2
BASS
S58
22K
R36
R37
C9
C10
1/2-1/4
BASS
ASS GENERATOR
MODULE 2-A
NOTES: 1. UNLESS OTHERWISE SPECIFIED, CONNECT PIN 9 TO +12V, PIN 4 TO -12V IN ALL 1458 OP AMPS.
2. ALL DIODES 1N4148 OR EQUIVALENT.
LIST OF MATERIALS
SYNTHAX-100
SYNTHESIZER FOR ELECTRIC GUITAR
electrax
TARZANA, CALIF.
D
APPLICATION

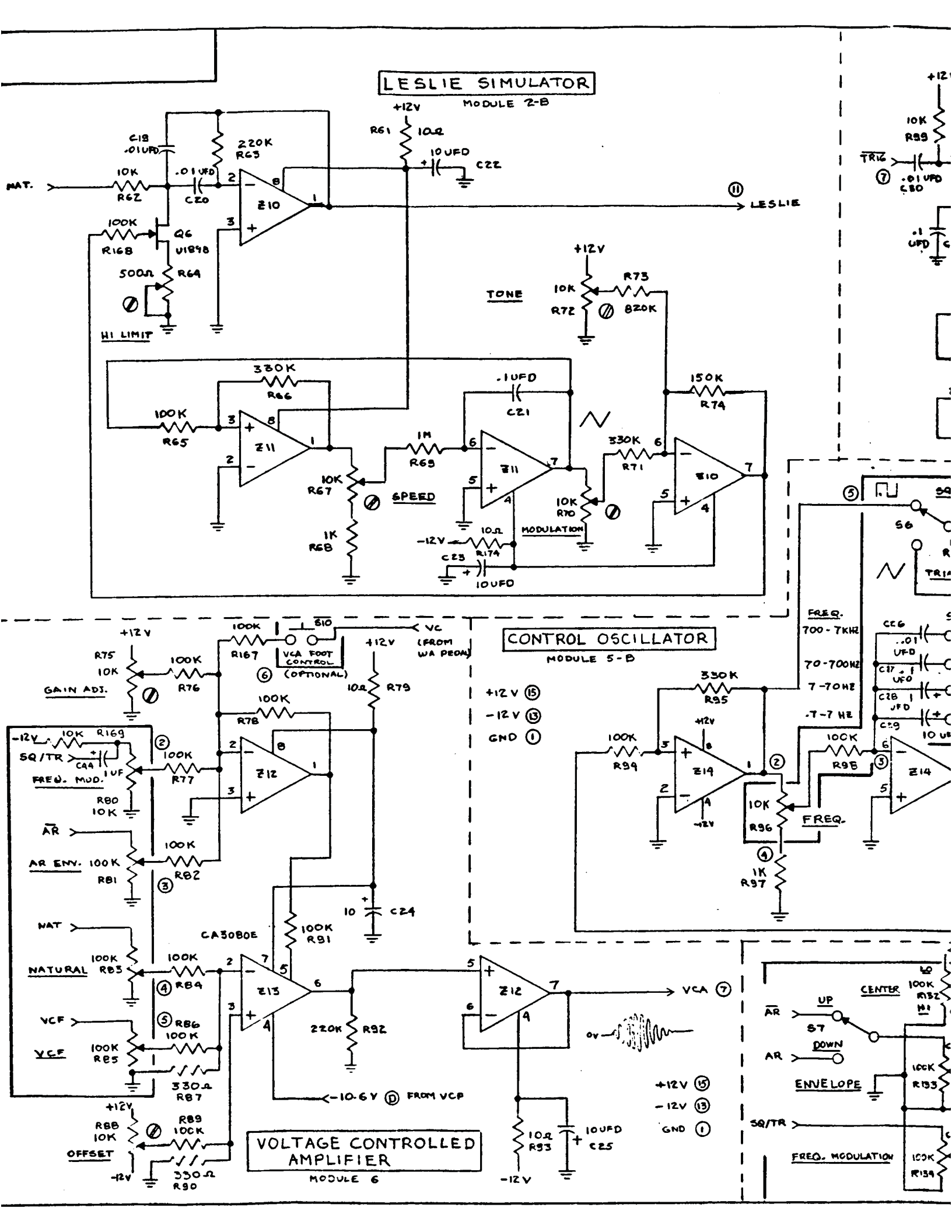
LESLIE SIMULATOR
MODULE 2-B
+12V
R61 10Ω
10 UFD C22
C19 .01UFD
220K R63
10K R62
.01 UFD C20
MAT.
Z10
11 LESLIE
100K R168
Q6 U1898
500Ω R64
HI LIMIT
TONE
+12V
10K R72
R73 820K
330K R66
100K R65
Z11
.1UFD C21
150K R74
1M R69
330K R71
Z11
Z10
10K R67
6SPEED
1K R68
10K R70
MODULATION
10Ω R174
-12V
C23 10UFD
CONTROL OSCILLATOR
MODULE 5-B
FREQ.
700-7KHZ
70-700HZ
7-70HZ
.7-7 HZ
CC6 .01 UFD
C27 .1 UFD
C28 1 UFD
C29
10 UFD
+12V 15
-12V 13
GND 1
330K R95
100K R94
Z14
100K R98
10K R96
FREQ.
1K R97
+12V
R75 10K
GAIN ADJ.
100K R76
100K R167
VCA FOOT CONTROL (OPTIONAL)
VC (FROM WA PEDAL)
10Ω R79
100K R78
-12V
10K R169
SQ/TR
C49 1UF
FREQ. MOD.
100K R77
R80 10K
Z12
AR
AR ENV. 100K R81
100K R82
MAT
NATURAL
100K R83
4 R84
VCF
5 R86
VCF
100K R85
330Ω R87
+12V
R88 10K
OFFSET
R89 100K
330Ω R90
-12V
CA3080E
100K R91
10 C24
Z13
220K R92
-10.6V D FROM VCP
Z12
VCA 7
0V
10Ω R93
10UFD C25
-12V
+12V 15
-12V 13
GND 1
VOLTAGE CONTROLLED AMPLIFIER
MODULE 6
CENTER
100K R132
UP
AR
S7
DOWN
AR
ENVELOPE
100K R133
SQ/TR
FREQ. MODULATION
100K R134

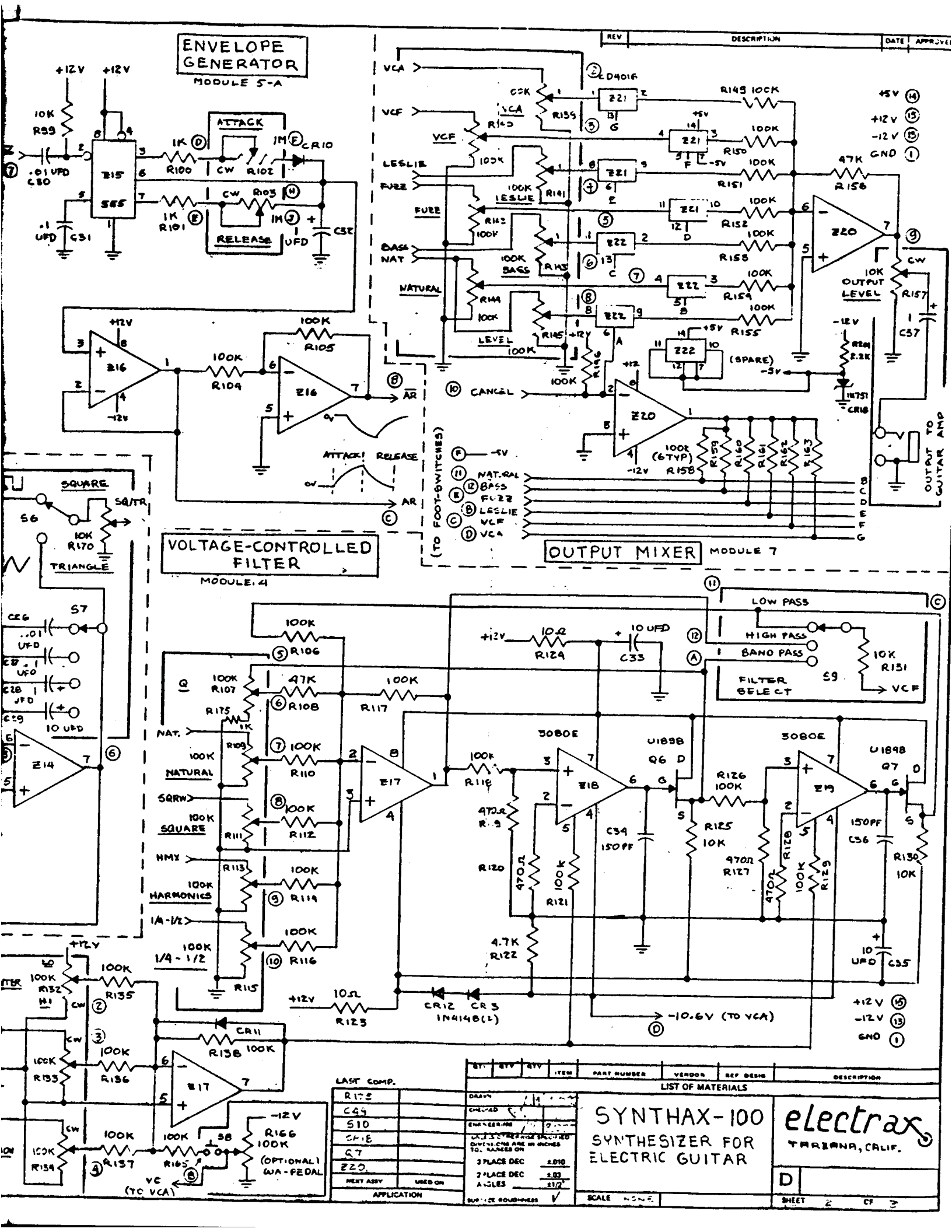
ENVELOPE GENERATOR
MODULE 5-A
ATTACK
RELEASE
VOLTAGE-CONTROLLED FILTER
MODULE 4
OUTPUT MIXER
MODULE 7
(TO FOOT-SWITCHES)
OUTPUT TO GUITAR AMP
LOW PASS
HIGH PASS
BAND PASS
FILTER SELECT
NATURAL
SQUARE
HARMONICS
1/4 - 1/2
-10.6V (TO VCA)
LAST COMP.
APPLICATION
LIST OF MATERIALS
SYNTHAX-100
SYNTHESIZER FOR ELECTRIC GUITAR
electrax
TARZANA, CALIF.
SCALE NONE
SHEET 2 OF 3