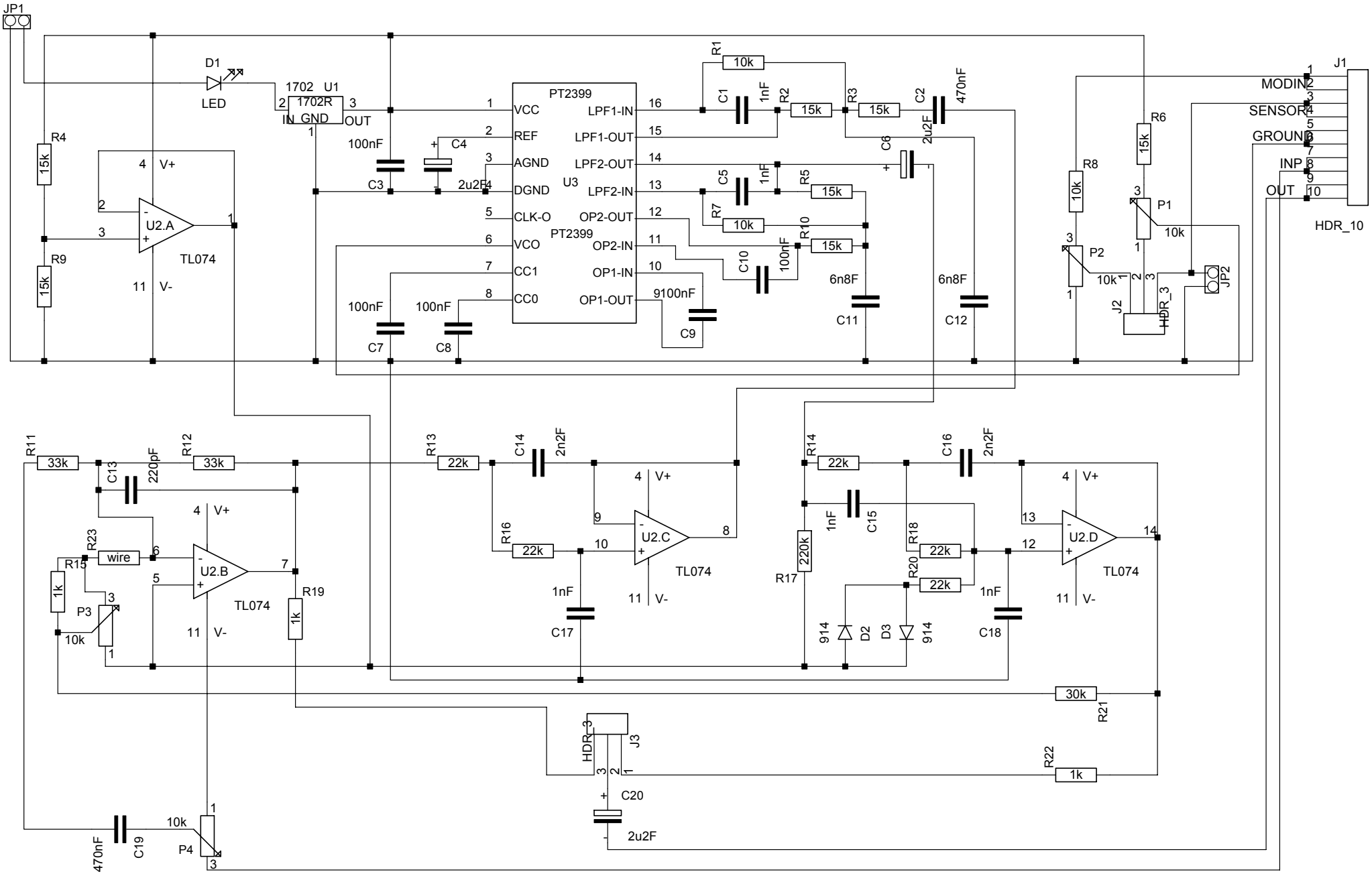
JP1
D1
LED
1702 U1
1702R
IN GND OUT
PT2399
U3
VCC
REF
AGND
DGND
CLK-O
VCO
CC1
CC0
LPF1-IN
LPF1-OUT
LPF2-OUT
LPF2-IN
OP2-OUT
OP2-IN
OP1-IN
OP1-OUT
R1 10k
R2 15k
R3 15k
R5 15k
R7 10k
R10 15k
C1 1nF
C2 470nF
C3 100nF
C4 2u2F
C5 1nF
C6 2u2F
C7 100nF
C8 100nF
C9 9100nF
C10 100nF
C11 6n8F
C12 6n8F
R4 15k
R9 15k
U2.A
TL074
V+
V-
J1
MODIN
SENSOR
GROUND
INP
OUT
HDR_10
R6 15k
R8 10k
P1 10k
P2 10k
J2
HDR_3
JP2
R11 33k
R12 33k
C13 220pF
R23 wire
R15 1k
P3 10k
U2.B
TL074
R19 1k
R13 22k
C14 2n2F
R16 22k
U2.C
TL074
1nF C17
R14 22k
C16 2n2F
1nF C15
R17 220k
R18 22k
R20 22k
914 D2
D3 914
1nF C18
U2.D
TL074
R21 30k
R22 1k
HDR_3 J3
C20 2u2F
C19 470nF
P4 10k