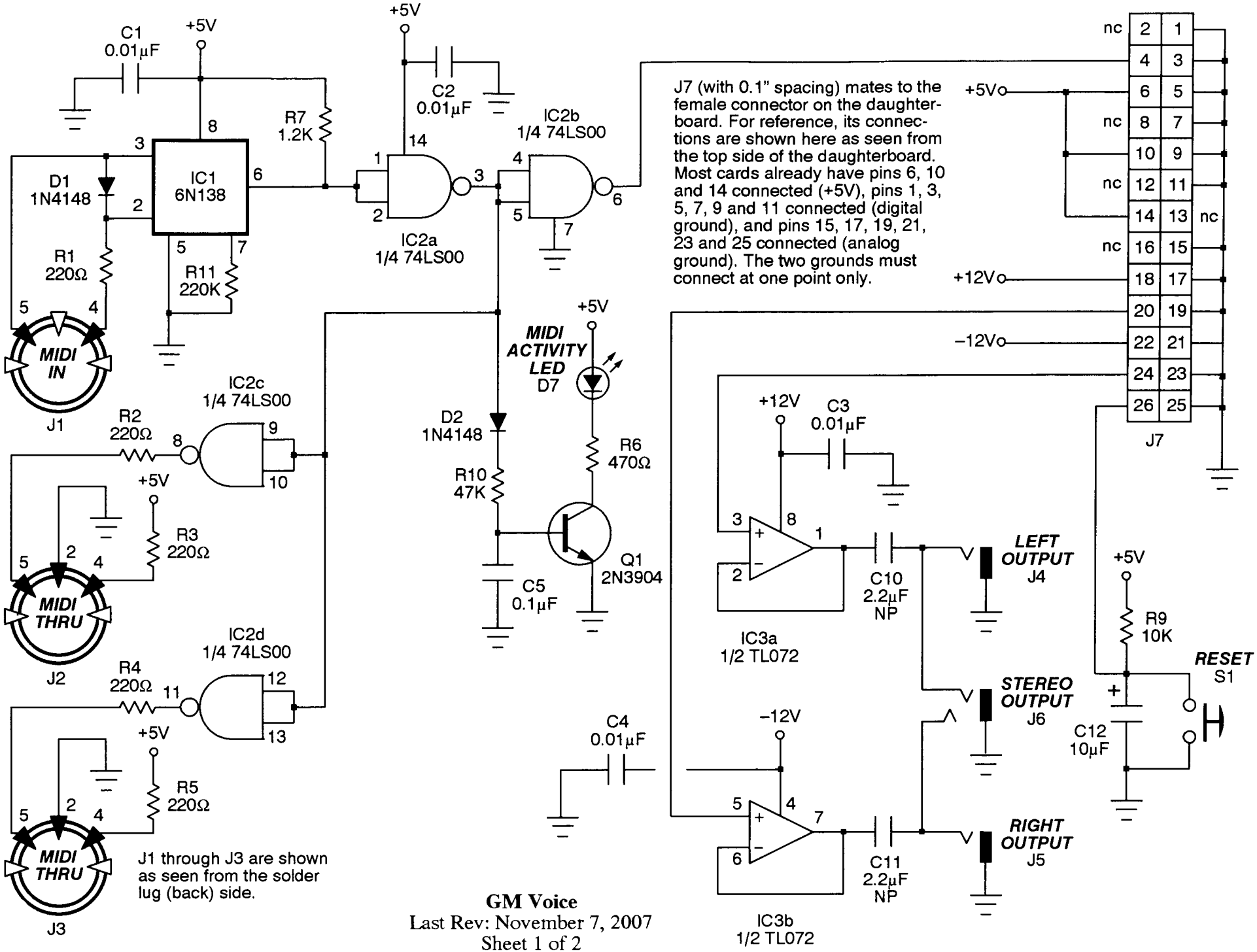

GM Voice
Last Rev: November 7, 2007
Sheet 1 of 2

© 2007 Dan Lavin and Thomas Henry
May not be reproduced without permission.