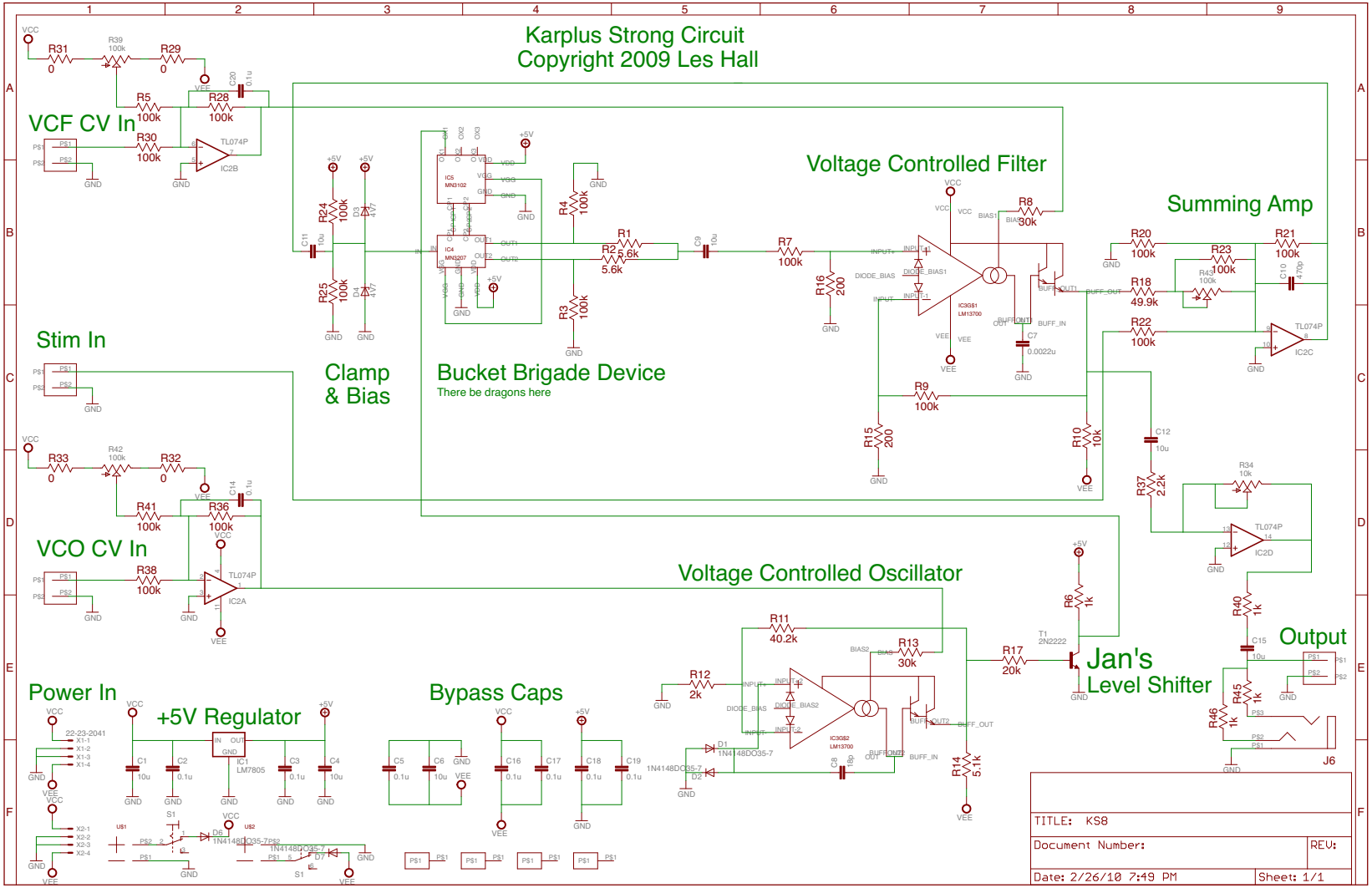

2/26/10 7:49 PM f=0.50 /Users/leshall/Documents/Eagle/KarplusStrong/KS8.sch (Sheet: 1/1)