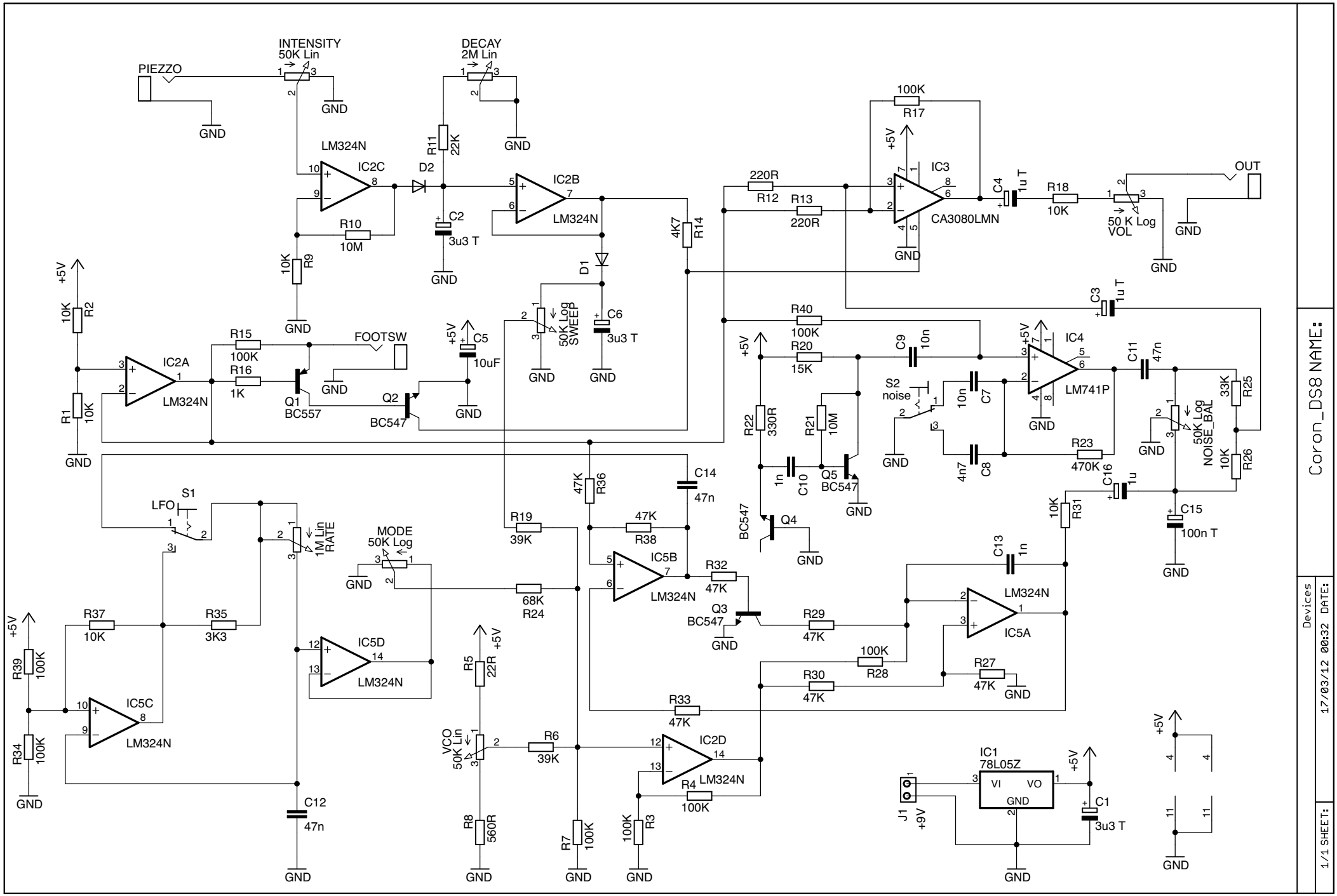

Coron_DS8 NAME:

Devices

17/03/12 00:32 DATE:

1/1 SHEET: