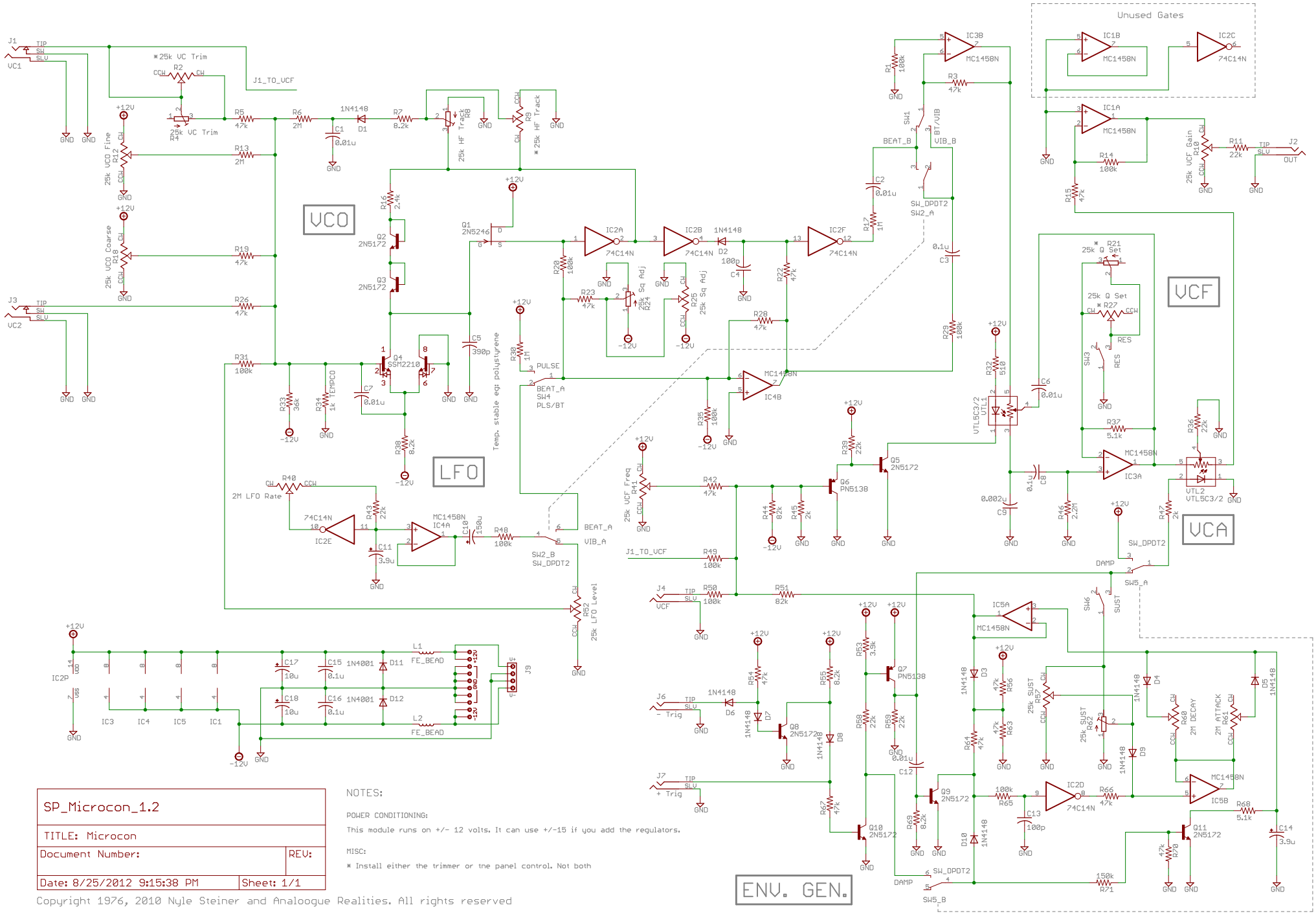

SP_Microcon_1.2	
TITLE: Microcon	
Document Number:	REV:
Date: 8/25/2012 9:15:38 PM	Sheet: 1/1

NOTES:

POWER CONDITIONING:

This module runs on +/- 12 volts. It can use +/-15 if you add the regulators.

MISC:

* Install either the trimmer or the panel control. Not both

Copyright 1976, 2010 Nyle Steiner and Analoogue Realities. All rights reserved