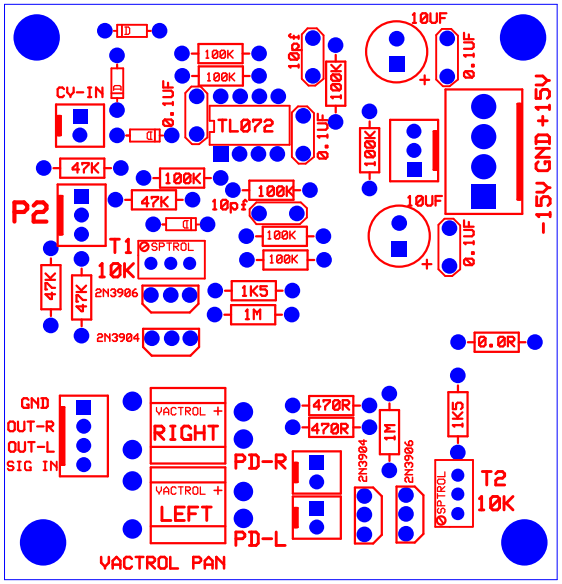
CV-IN
P2
47K
47K
47K
47K
100K
100K
100K
100K
100K
100K
100K
100K
10pf
10pf
0.1UF
0.1UF
0.1UF
0.1UF
TL072
T1
10K
SPTROL
2N3906
2N3904
1K5
1M
10UF
10UF
-15V GND +15V
0.0R
GND
OUT-R
OUT-L
SIG IN
VACTROL +
RIGHT
VACTROL +
LEFT
VACTROL PAN
PD-R
PD-L
470R
470R
1M
2N3904
2N3906
1K5
SPTROL
T2
10K