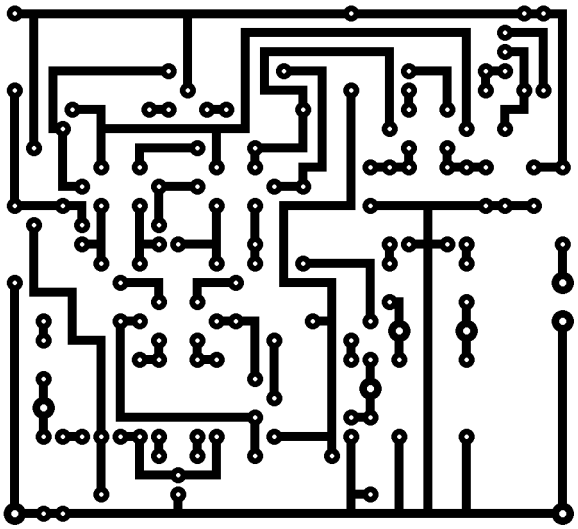

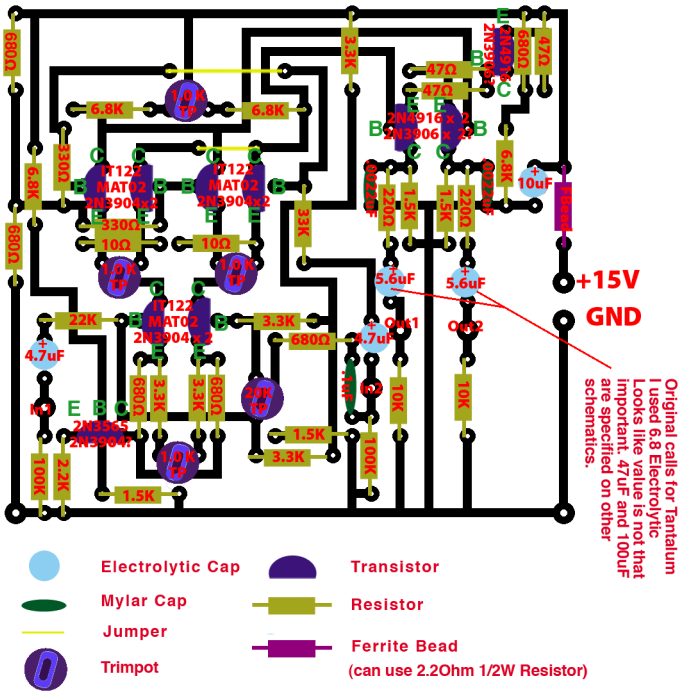

Buchla 111 Ring Mod PCB
Tested and verified on 7/31/09