ENDLESS NOISE

by dan snazelle
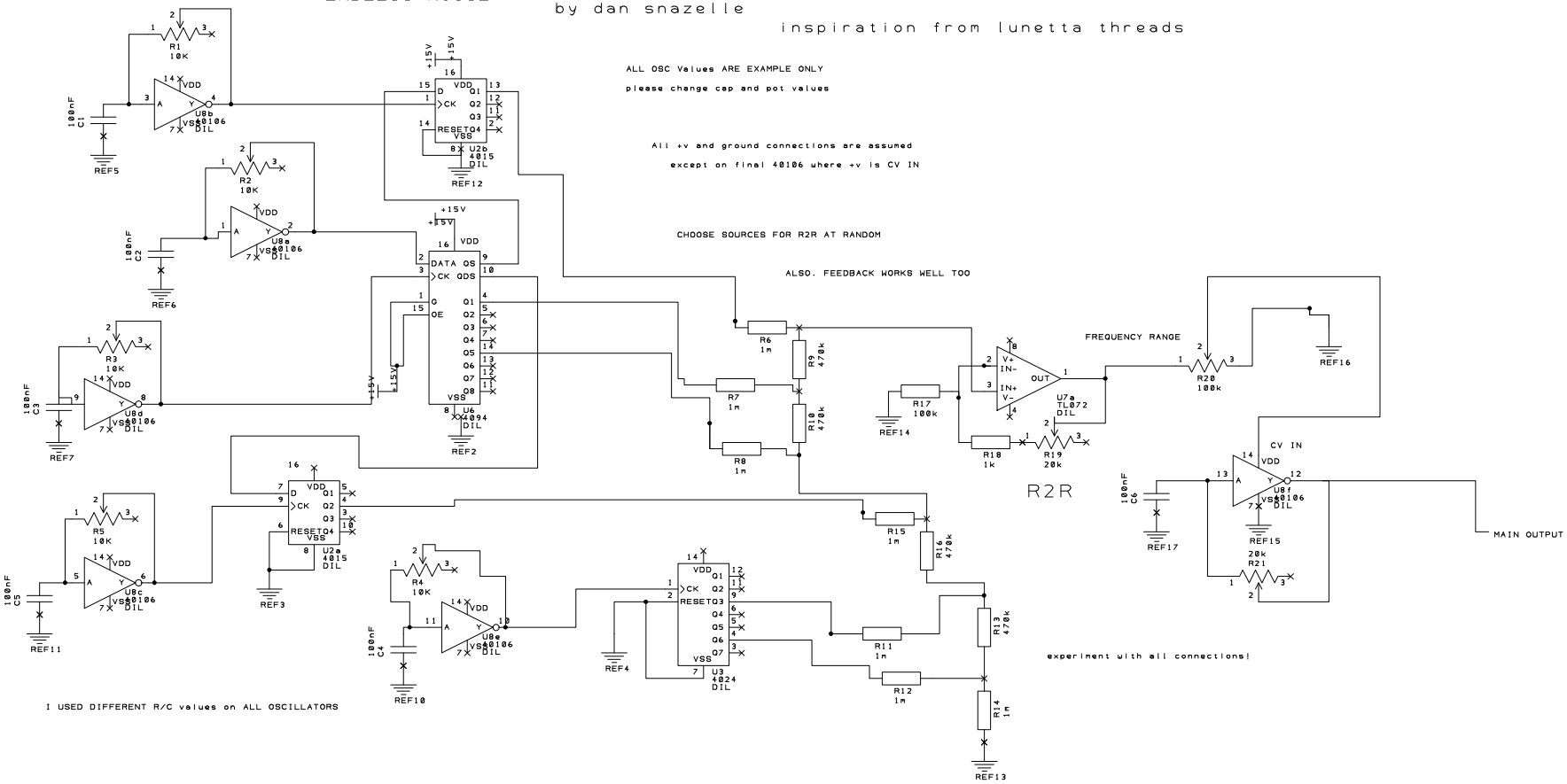
inspiration from lunetta threads