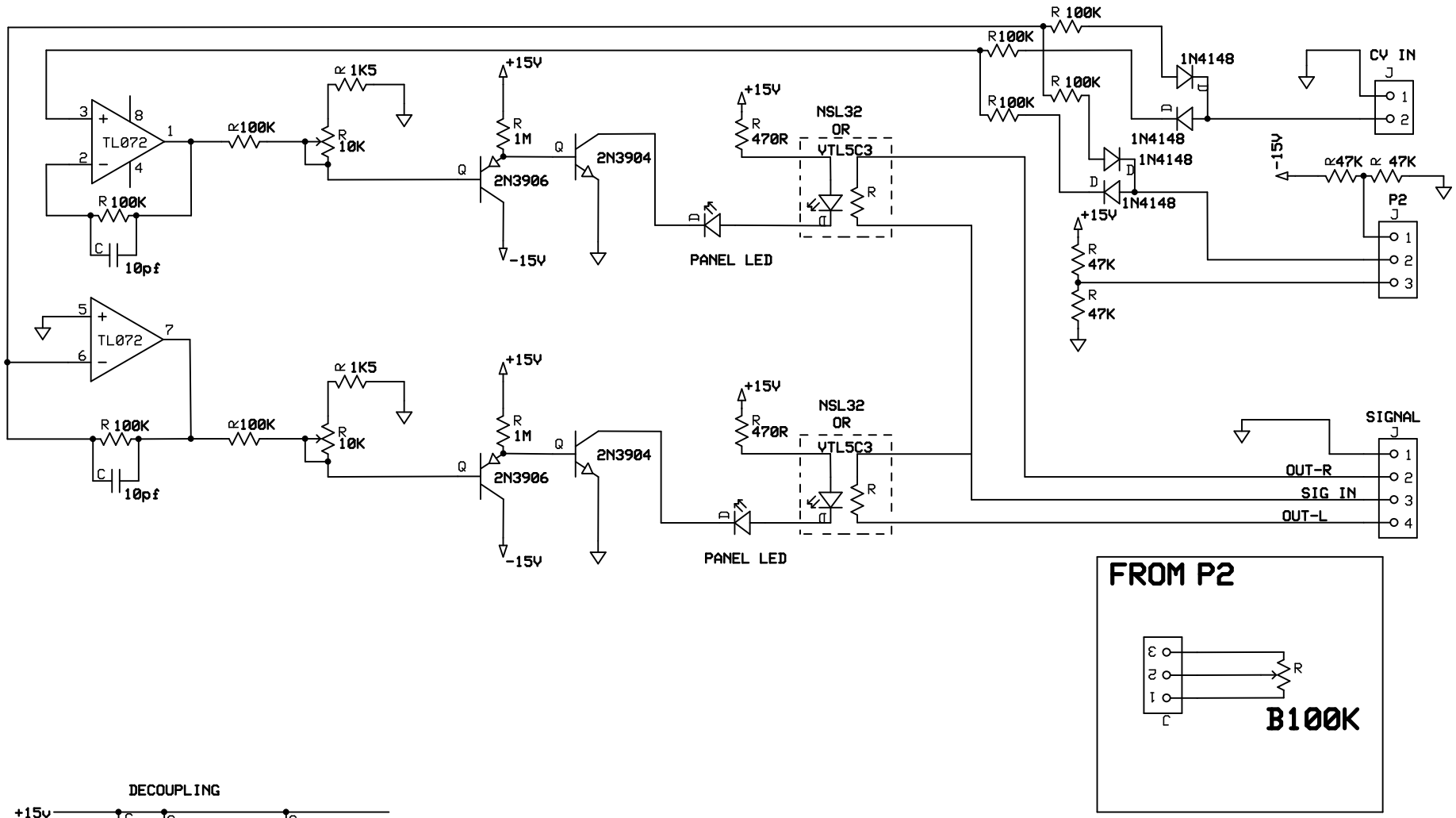

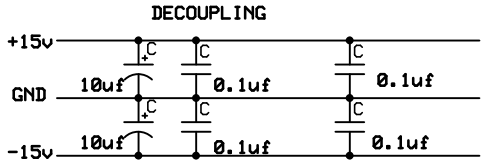

DIABLOJOY		
VACTROL PAN		
Designer's name	Rev 1.0 12/3/2011	Page # or name